Spare parts catalogue

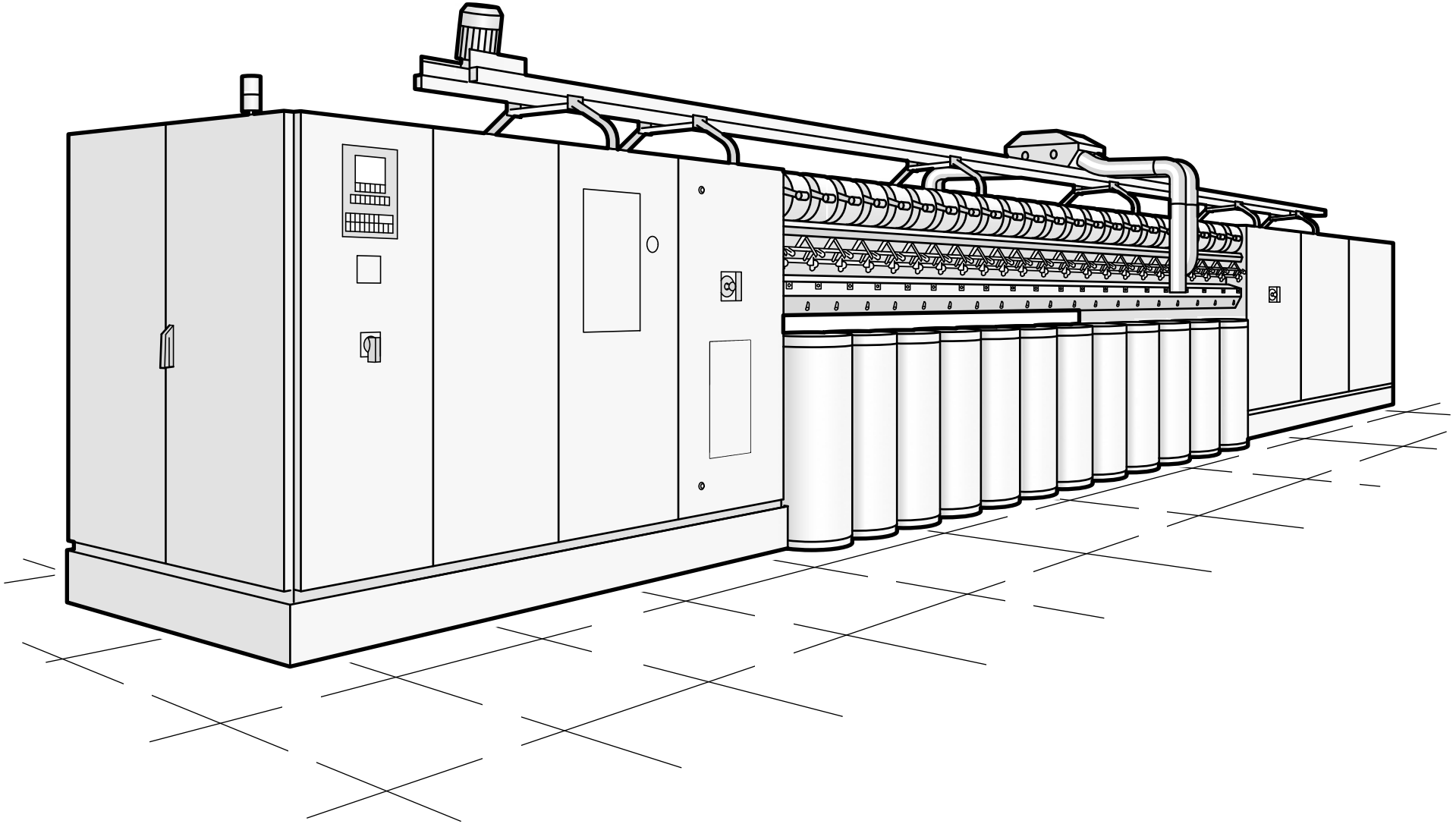

R 36

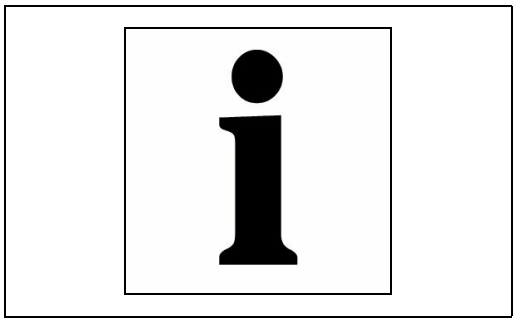

i

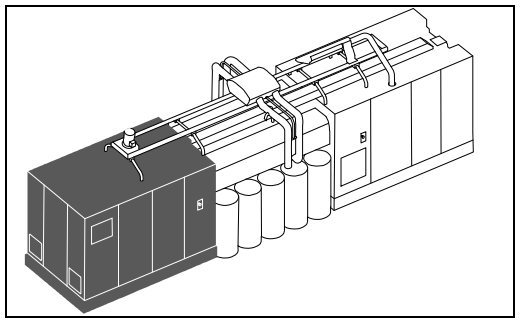

1

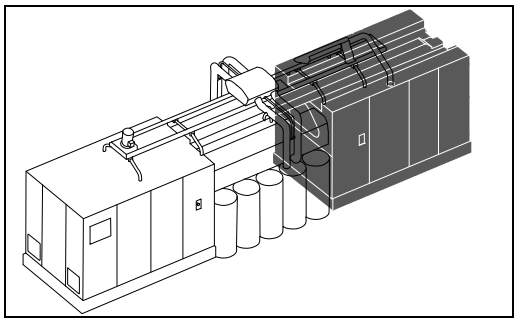

2

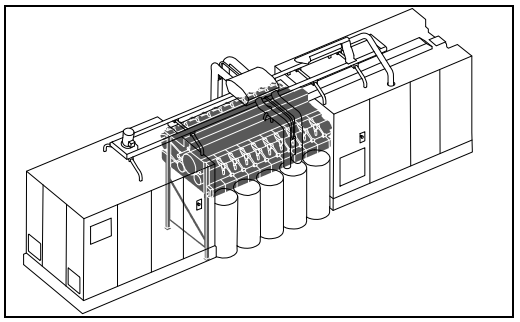

3

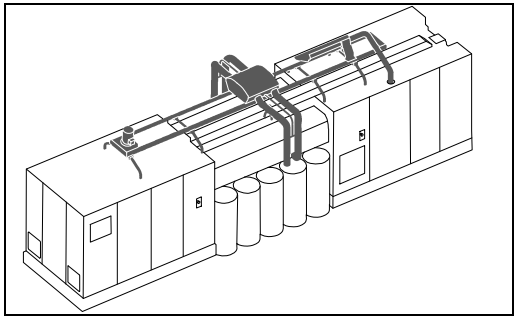

6

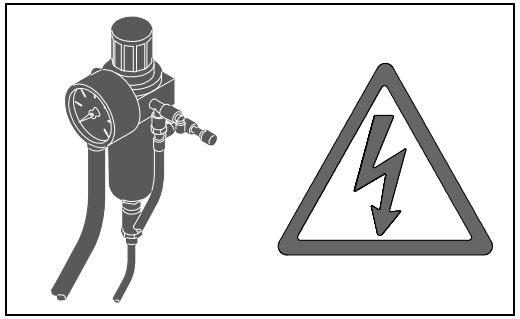

8

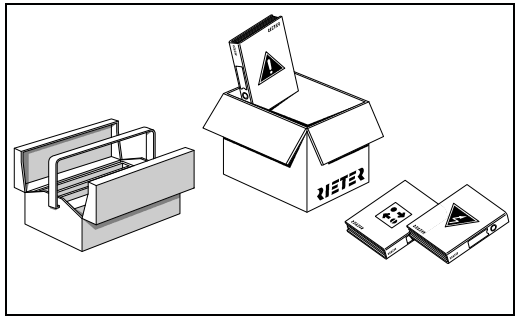

9

R 36

Dear Customer,

You have made an excellent decision in opting Rieter maschines.

Our after-sales service will do everything possible to make sure that you have no cause to regret your decision during the years to come.

Please use only original Rieter spare parts. These are always state-of-the-art and are your guarantee for first-class material and processing. Please also note that we offer no guarantee for damage to maschines if this is related to spare parts or retrofits that have not been obtained direct from us or through our authorised agents.

Notes on How to Use the Catalogue

In order to ensure rapid delivery of spare parts, please take note of the given general information.

Important information

In the spare parts list, under the column ?Comments?, you will find the marks P or G. On the drawings you will find the symbol with the ?eye?.

Tag	Meaning	Explanation
P	Recommended spare part	Preventive storage of the most important spare parts to ensure continued production in your plant is a risk you can calculate. For this reason we have marked the most important spare parts for your machine in the spare parts list with this code. Take advantage of our experience! On request, your Rieter Parts Service will be glad to let you have a quotation for these recommended parts.
G	Limited guarantee claim	Change the parts subject to normal wear and tear in time and carry out regular maintenance to insure that you can use your machine to its maximum capacity. As agreed in para. 12.5 of the General Conditions of Sale and Delivery, we refuse all claims under guarantee for damage due to continued use of worn out parts or faulty maintenance, and for the parts to be replaced that have worn out due to normal wear and tear.
110	Reference	Related parts to this assembly are found in chapter 110, among others.
Option	Reference	please find further material numbers for this catalogue number along with other parameters in the Options appendix.
L 001	Note	The catalogue No. to the left hand side of the machine e.g. L 001.
R 002	Note	The catalogue No. to the right hand side of the machine e.g. R 002.

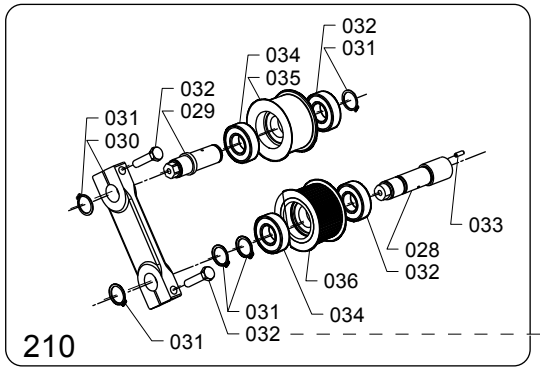

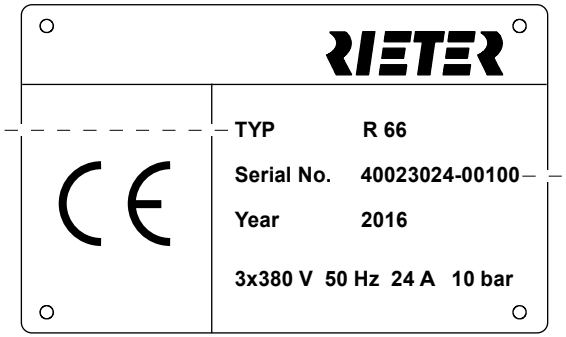

Kunde / Customer
We make it LTD
50000

Maschinen-Typ / Maschine type
R 66

Katalog-Nr . Catalogue No	Material-Nr . Part No.	Part description en
210.032	1099270	off-center bolt

Item Pos. Pos.	Machine Type Machinentyp Machine Type	Important - Wichtig - Important Year Jahr Année	Serial No. Serial Nr. No. de catalogue	Catalogue No. Katalog-Nr. No. de catalogue	Part No. Teile-Nr. No. article	Description Artikel-Bezeichnung Description	Quantity Menge Quantité
1	R 66	2016	40023024 -00100	210.032	1099270	off-center bolt	1

Rieter Textile Systems

Rieter Ingolstadt GmbH
D-85055 Ingolstadt

Maschinenfabrik Rieter AG
CH-8406 Winterthur

Parts

Fax CH +41 52 208-8080

Fax D +49 841 9536-880

Internet: www.rieterparts.com

E-Mail: aftersales@rieter.com

☐ Proforma Invoice
Proforma-Rechnung
Facture Proforma

☐ Offer
Angebot
Offre

☒ Order
Bestellung
Commande

☐ Partial shipment
Teillieferung
Livraison partielle

☒ Full shipment
Gesamtlieferung
Livraison globale

Customer No.
Kunden-Nr.
No. de client: *50000*

Customer´s address
Kunden-Adresse
Adresse du client: *We make it LTD*
Mill Road 91
RIE TER Mill Town
United Kingdom

Customer´s reference
Kunden-Referenz
Référence client: *000 - 01.10.2008*

Delivery address
Versandanschrift
Expédition à: *We make it LTD / John Smith*
Mill Road 91, RIE TER Mill Town

Means of Transport
Versandvorschrift
Prescription d'expédition: *by courier*

Remarks
Bemerkungen
Remarques

Date / Signature
Datum / Unterschrift
Date / Signature

Item Pos. Pos.	Machine Type Machinentyp Machine Type	Important - Wichtig - Important Year Jahr Année	 Serial No. Serien-Nr. No. de série	Catalogue No. Katalog-Nr. No. de catalogue	Part No. Teile-Nr. Ni. article	Description Artikel-Bezeichnung Description	Quantity Menge Quantité
1	*R 66*	*2016*	*40023024-00100*	*210.032*	*1099270*	*off-center bolt*	*1*
2	*R 66*	*"*	*"*	*210.017*	*1094254*	*press sleve 18/25 x 19*	*4*
3	*R 66*	*"*	*"*	*210.007*	*8500424*	*locking ring 42 x 1,75*	*10*

Rieter Textile Systems

Rieter Ingolstadt GmbH
D-85055 Ingolstadt

Maschinenfabrik Rieter AG
CH-8406 Winterthur

Parts

Fax CH +41 52 208-8080

Fax D +49 841 9536-880

Internet: www.rieterparts.com

E-Mail: aftersales@rieter.com

☐ Proforma Invoice
Proforma-Rechnung
Facture Proforma

☐ Offer
Angebot
Offre

☐ Order
Bestellung
Commande

☐ Partial shipment
Teillieferung
Livraison partielle

☐ Full shipment
Gesamtlieferung
Livraison globale

Customer No.
Kunden-Nr.
No. de client _____

Customer´s address
Kunden-Adresse
Adresse du client _____

_____

_____

_____

Customer´s reference
Kunden-Referenz
Référence client _____

Delivery address
Versandanschrift
Expédition à _____

_____

Means of Transport
Versandvorschrift
Prescription d'expédition _____

Remarks
Bemerkungen
Remarques _____

_____

_____

Date / Signature
Datum / Unterschrift
Date / Signature _____

Item Pos. Pos.	Machine Type Machinentyp Machine Type	Important - Wichtig - Important Year Jahr Année	 Serial No. Serien-Nr. No. de série	Catalogue No. Katalog-Nr. No. de catalogue	Part No. Teile-Nr. Ni. article	Description Artikel-Bezeichnung Description	Quantity Menge Quantité

Item Pos. Pos.	Machine Type Machinentyp Machine Type	Important - Wichtig - Important Year Jahr Année	 Serial No. Serien-Nr. No. de série	Catalogue No. Katalog-Nr. No. de catalogue	Part No. Teile-Nr. Ni. article	Description Artikel-Bezeichnung Description	Quantity Menge Quantité

R 36

RIETER

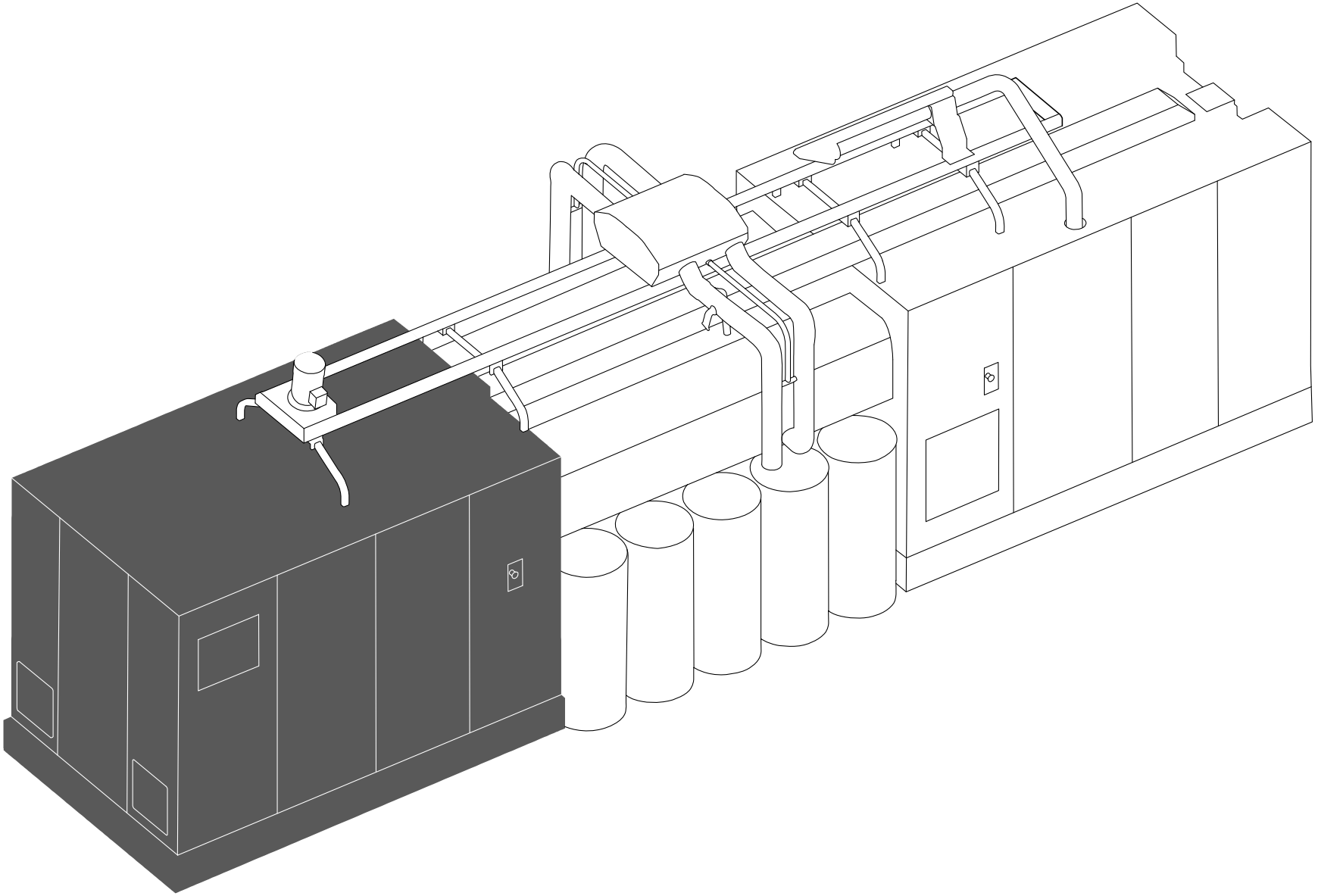

Navi_1_01.cgm

R 36

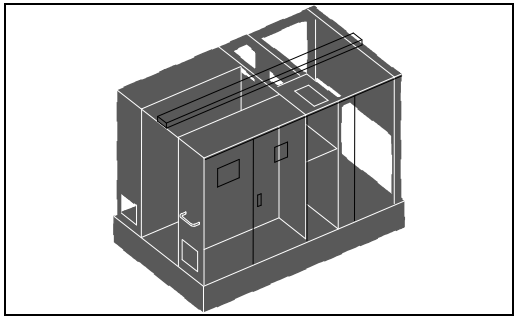

105

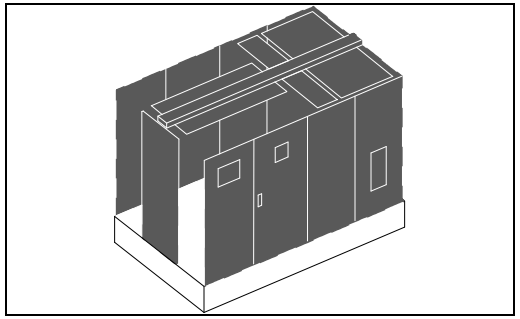

110

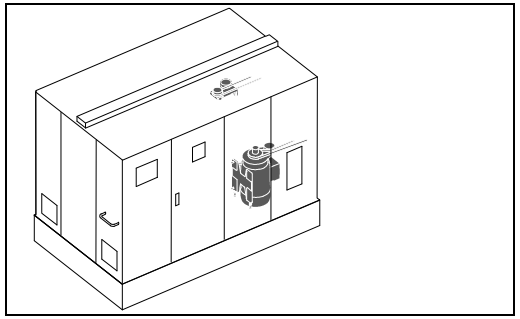

120

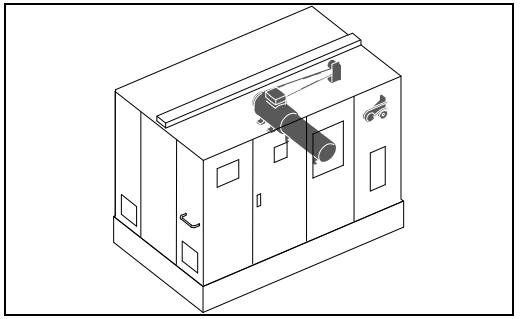

125

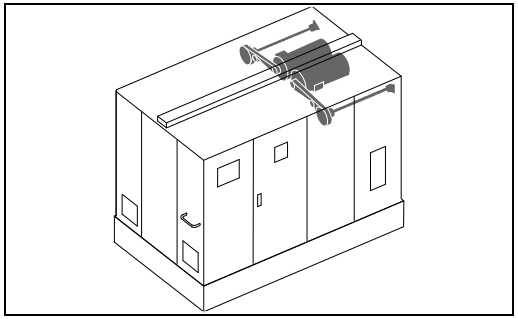

135

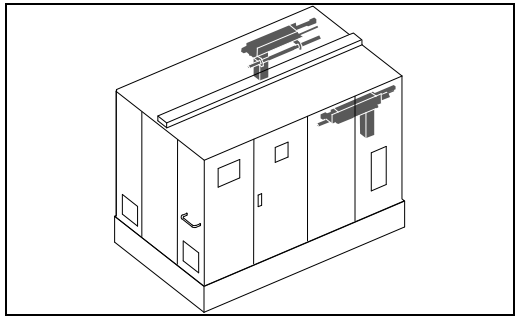

140

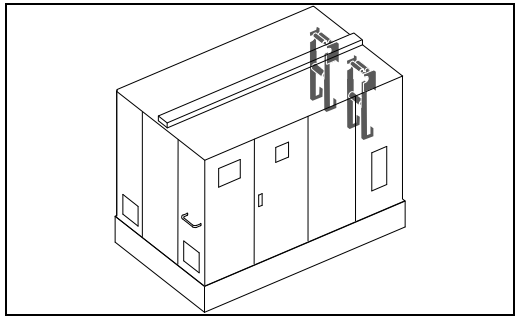

160

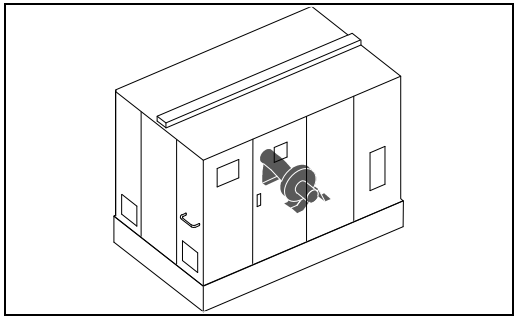

195

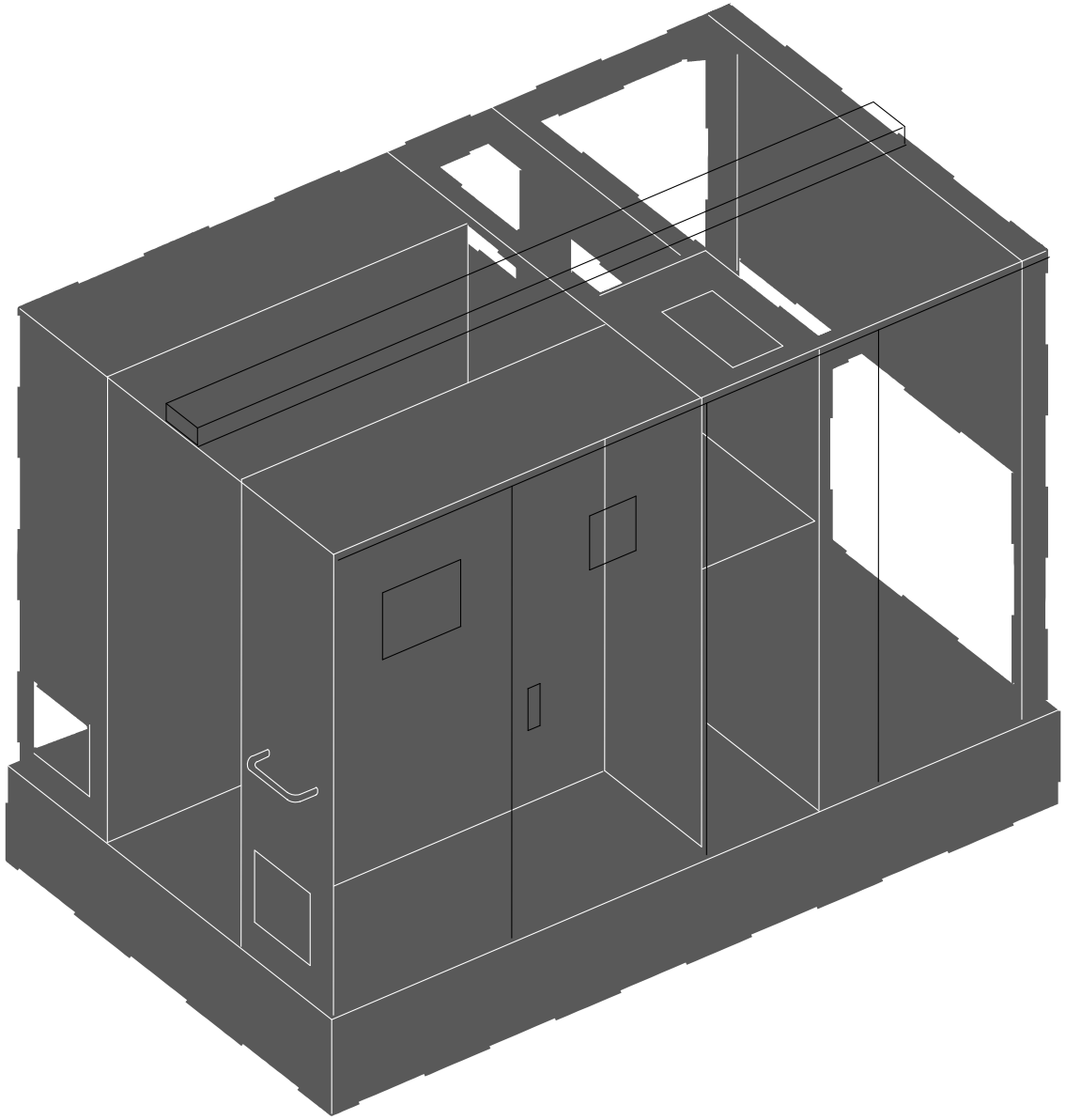

R 36

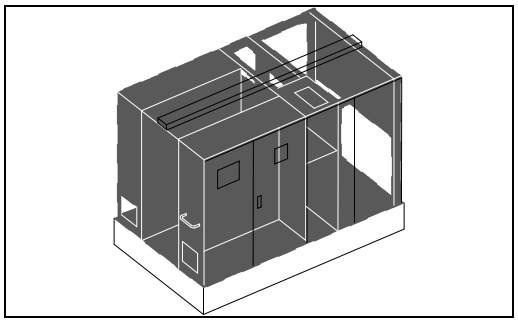

10510

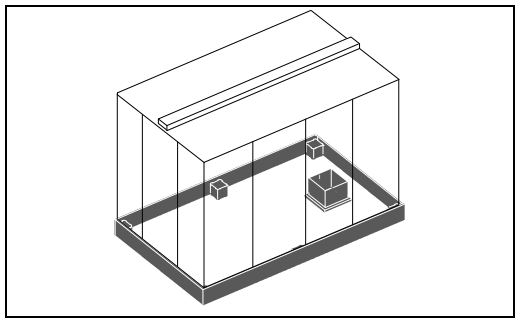

10520

R 36

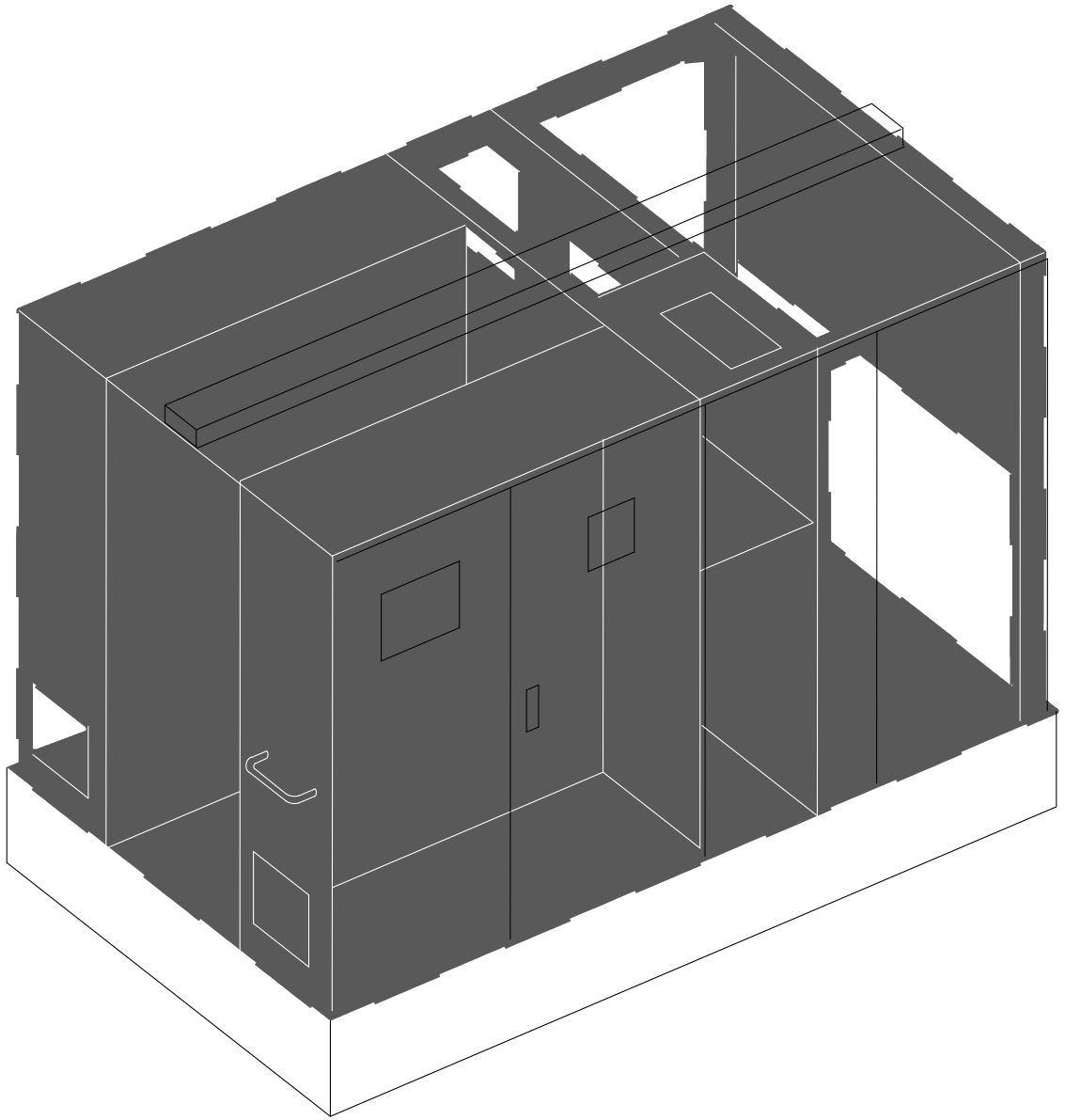

10510

Navi_1_05_10_01.cgm

R 36

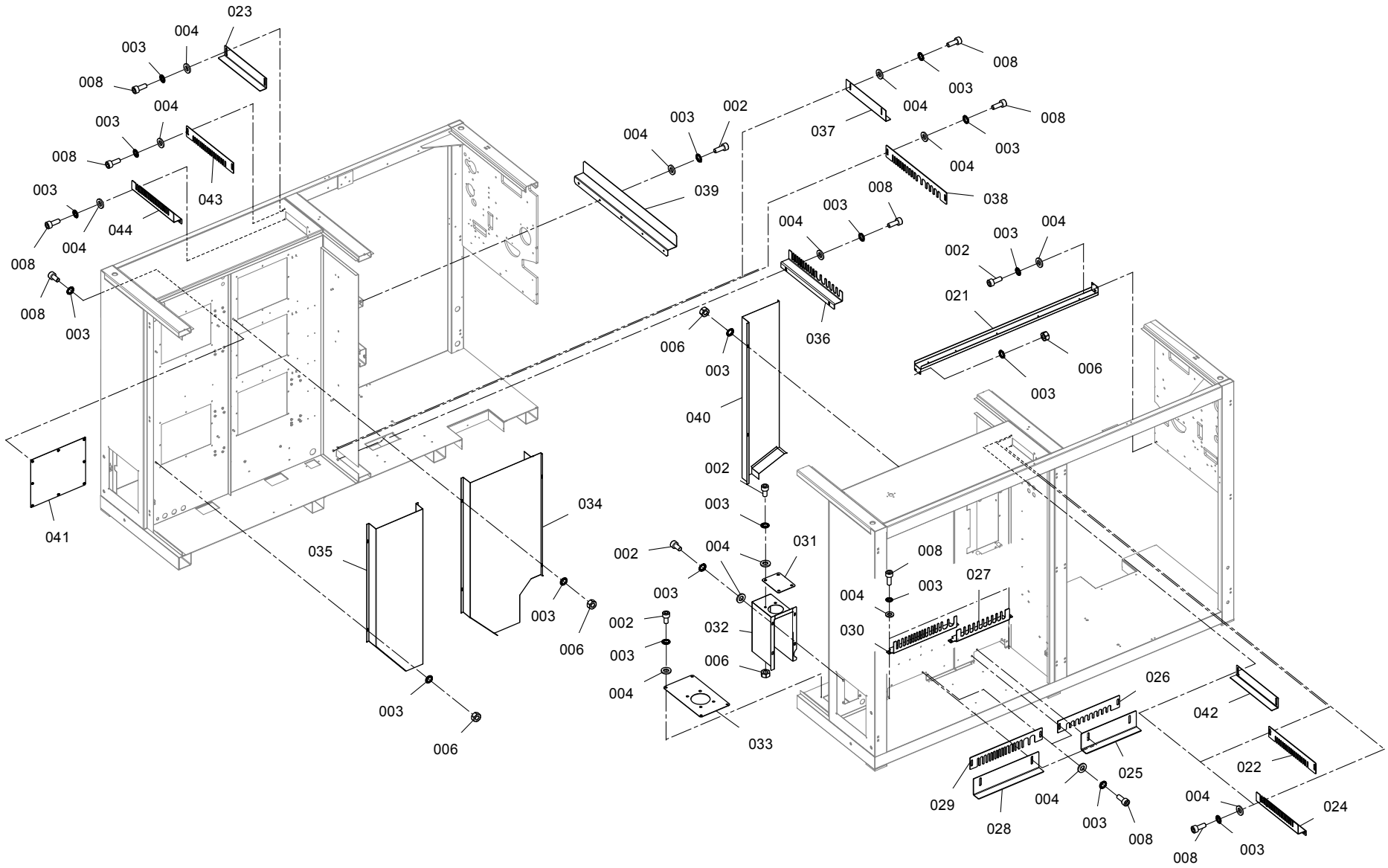

10510

RXX_1_05_10_A201.cgm

Catalogue no. Katalog-Nr.	Part No. Material-Nr.	Part description en	Material-Bezeichnung de	Comment Bemerkung
10510.002	10258924	Cyl.screw M6x12	Zyl.Schraube M6x12	
10510.003	10258859	Locking washer 6.4/10	Sicherungsscheibe 6.4/10	
10510.004	10258850	Washer 6.4-St-140HV	Scheibe 6.4-St-140HV	
10510.006	10431759	Hexagon nut M6-8	6kt-Mutter M6-8	
10510.008	10258828	Cyl.screw M6x16	Zyl.Schraube M6x16	
10510.021	10754505	Channel welded EL	Kanal geschweisst EL	
10510.022	10967641	Cable rake straight V V2 0	Kabelrechen gerade V V2 0	
10510.023	10696632	Angle piece III.	Winkelst?ck III.	
10510.024	10967640	Cable rake bended V V2 0	Kabelrechen gebogen V V2 0	
10510.025	10696363	Angle piece I.	Winkelst?ck I.	
10510.026	10966750	Cable rake straight I V2 0	Kabelrechen gerade I V2 0	
10510.027	10966722	Cable rake bended I V2 0	Kabelrechen gebogen I V2 0	
10510.028	10755286	Angle piece II.	Winkelst?ck II.	
10510.029	10967651	Cable rake straight II V2 0	Kabelrechen gerade II V2 0	
10510.030	10967630	Cable rake bended II V2 0	Kabelrechen gebogen II V2 0	
10510.031	10735842	Lid input EL.	Deckel Eingang EL.	
10510.032	10718712	Cover input EL.	Abdeckung Eingang EL.	
10510.033	10712172	Lid input EL. 2	Deckel Eingang EL. 2	
10510.034	10925406	Covering V2	Verkleidung V2	
10510.035	10926528	Covering E II V2	Verkleidung E II V2	
10510.036	10966753	Cable rake bended IV V2 0	Kabelrechen gebogen IV V2 0	
10510.037	10755385	Angle piece IV.	Winkelst?ck IV.	
10510.038	10966755	Cable rake straight IV V2 0	Kabelrechen gerade IV V2 0	
10510.039	10928320	Plate bended	Platte gebogen	
10510.040	10752537	Covering E III.	Verkleidung E III.	
10510.041	10962859	Cover welded FC DE 2.1	Abdeckung geschweisst FC DE 2.1	
10510.042	10967649	Angle piece V V2 0	Winkelst?ck V V2 0	
10510.043	10967643	Cable rake straight III V2 0	Kabelrechen gerade III V2 0	

R 36

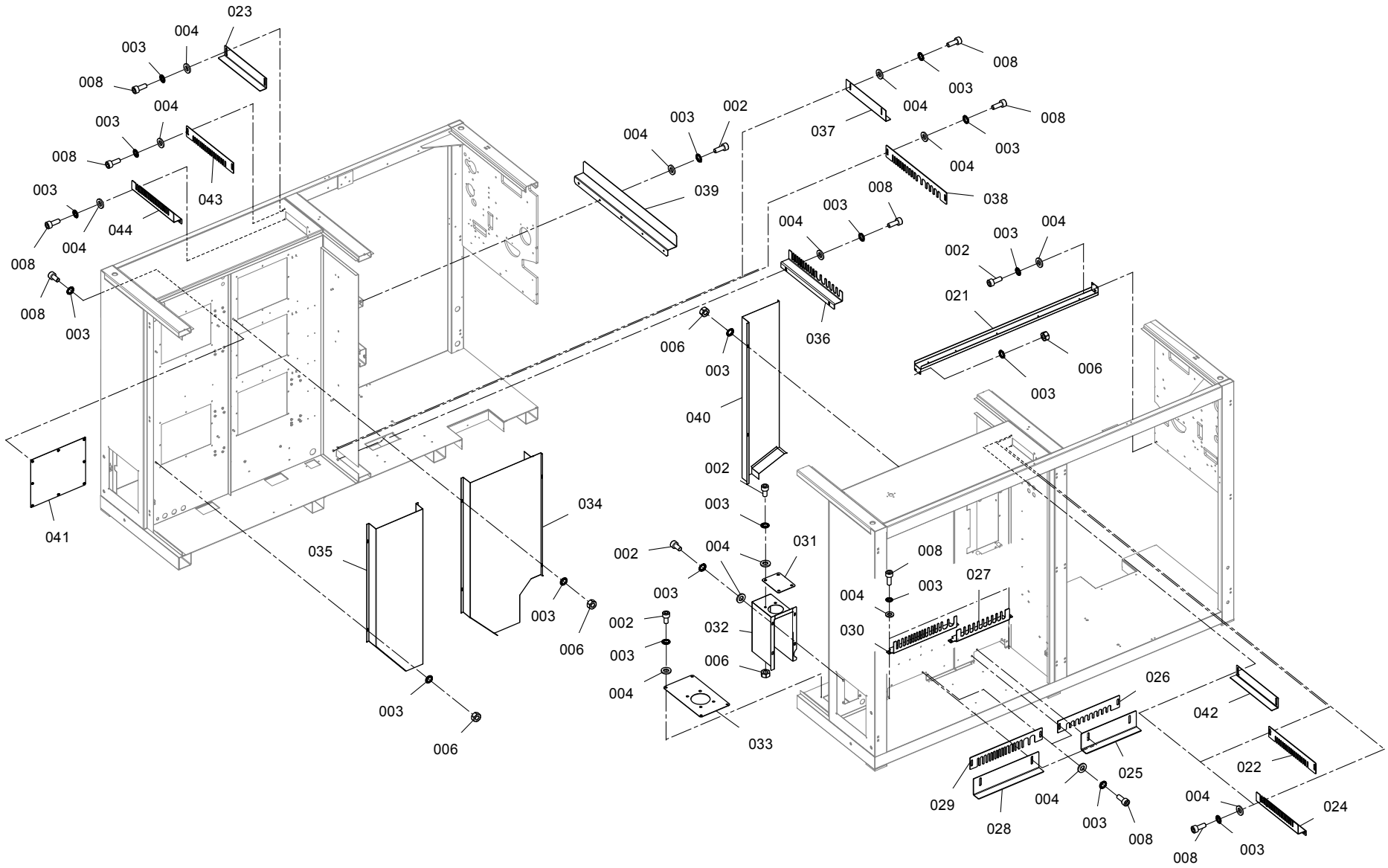

10510

RXX_1_05_10_A201.cgm

Catalogue no. Katalog-Nr.	Part No. Material-Nr.	Part description en	Material-Bezeichnung de	Comment Bemerkung
10510.044	10967642	Cable rake bended III V2 0	Kabelrechen gebogen III V2 0	

R 36

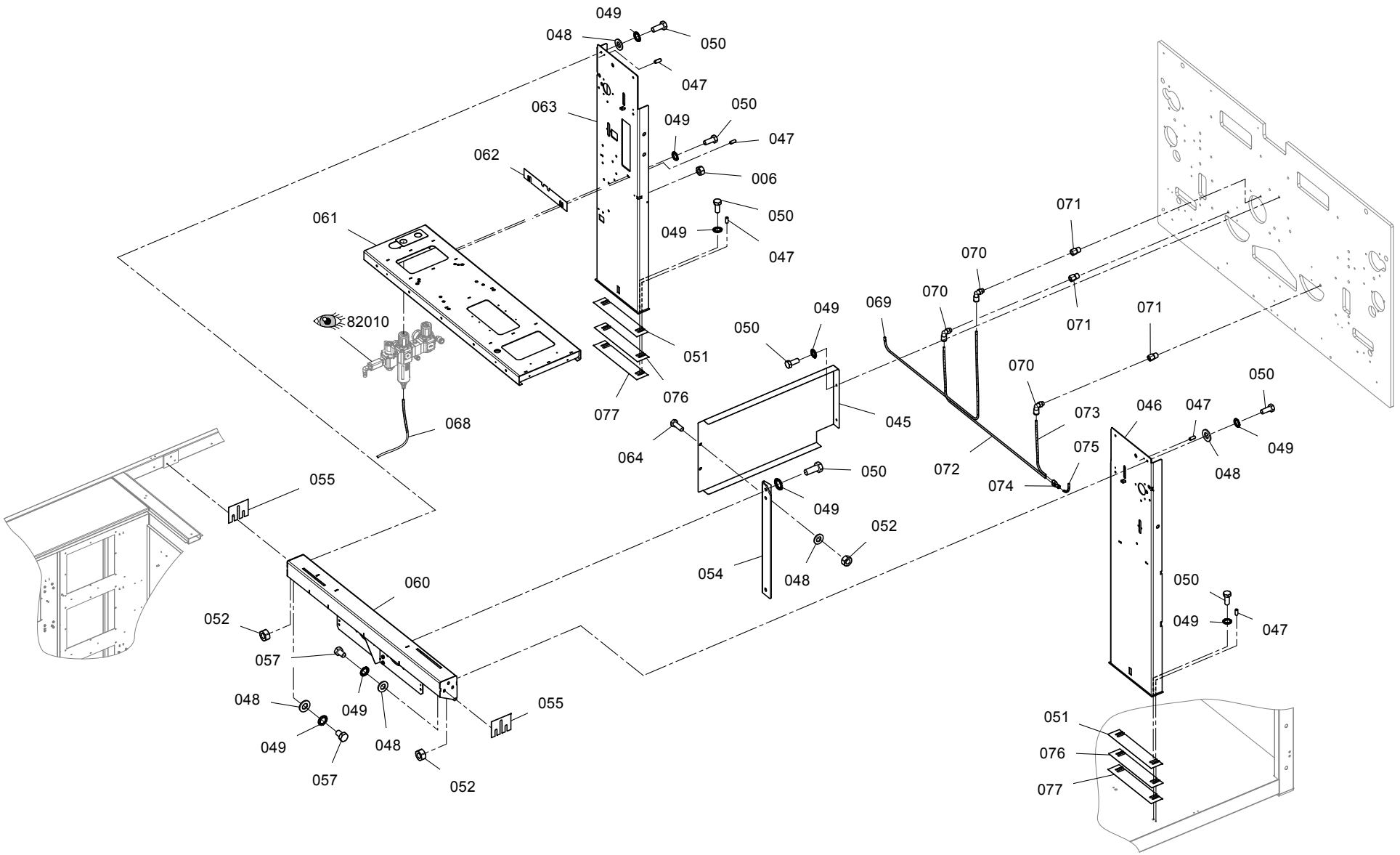

10510

RXX_1_05_10_B301.cgm

Catalogue no. Katalog-Nr.	Part No. Material-Nr.	Part description en	Material-Bezeichnung de	Comment Bemerkung
10510.006	10431759	Hexagon nut M6-8	6kt-Mutter M6-8	
10510.045	10969512	Cover wall	Deckwand	
10510.046	10963295	Frame bridge complete R 2.1	Rahmensteg komplett R 2.1	
10510.047	10356477	Dowel pin 6x15	Spannstift 6x15	
10510.048	10478062	Washer 10.5-St-200HV	Scheibe 10.5-St-200HV	
10510.049	10259423	Locking washer 10.5/16	Sicherungsscheibe 10.5/16	
10510.050	10259092	Hex. screw M10x25	6kt-Schraube M10x25	
10510.051	10764200	Insert 0,5 mm	Einlage 0,5 mm	
10510.052	10431840	Hexagon nut M10-8	6kt-Mutter M10-8	
10510.054	10819968	Supporting angle	Auflagewinkel	
10510.055	UE7321658	Distance plate top	Distanzplatte oben	
10510.057	10243710	Hex. screw M10x16	6kt-Schraube M10x16	
10510.060	10929331	Crossbeam welded SD	Quertr?ger geschweisst SD	
10510.061	10971376	Motor support welded R R35 V2	Motorsupport geschweisst R R35 V2	
10510.062	10752207	Insert 1mm	Einlage 1mm	
10510.063	10933239	Frame bridge complete L	Rahmensteg komplett L	
10510.064	10259094	Hex. screw M10x35	6kt-Schraube M10x35	
10510.068	10971896	Hose 6/4 - 900	Schlauch 6/4 - 900	
10510.069	10931876	Hose 6/4 - 1100 TA	Schlauch 6/4 - 1100 TA	
10510.070	U59804659	Coupling 6 / 4 / G1/8	Kupplung 6 / 4 / G1/8	
10510.071	10698640	Insert	Einsatz	
10510.072	10931987	Hose 6/4 - 900 WA LS	Schlauch 6/4 - 900 WA LS	
10510.073	10765307	Hose 6/4 - 300 WA RS	Schlauch 6/4 - 300 WA RS	
10510.074	10765428	Y-plug connection 6/ 2x6	Y-Steckverbindung 6/ 2x6	
10510.075	10765429	Hose 6/4 - 150 WA C-S	Schlauch 6/4 - 150 WA C-S	
10510.076	10820480	Insert 0,3mm	Einlage 0,3mm	
10510.077	10752106	Insert 1mm	Einlage 1mm	

R 36

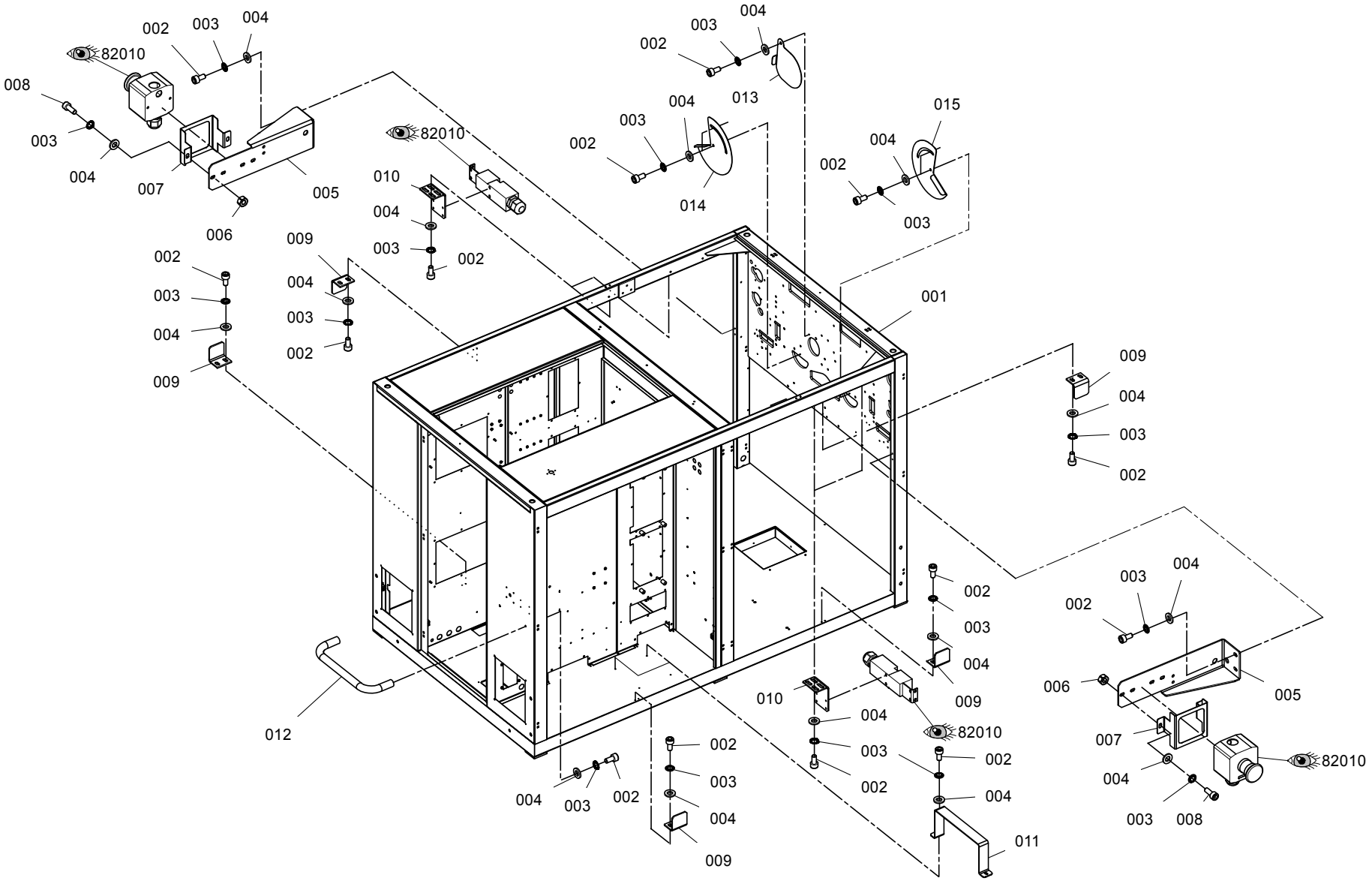

10510

RXX_1_05_10_101.cgm

Catalogue no. Katalog-Nr.	Part No. Material-Nr.	Part description en	Material-Bezeichnung de	Comment Bemerkung
10510.001	10935382	Frame welded R35 HS	Rahmen geschweisst R35 HS	
10510.002	10258924	Cyl.screw M6x12	Zyl.Schraube M6x12	
10510.003	10258859	Locking washer 6.4/10	Sicherungsscheibe 6.4/10	
10510.004	10258850	Washer 6.4-St-140HV	Scheibe 6.4-St-140HV	
10510.005	10698230	Emergency shut-down button holder	Not-Aus-Taster Halter	
10510.006	10431759	Hexagon nut M6-8	6kt-Mutter M6-8	
10510.007	10413730	Frame	Rahmen	
10510.008	10258828	Cyl.screw M6x16	Zyl.Schraube M6x16	
10510.009	10693423	Angle piece	Winkelst?ck	
10510.010	10693106	Switch carrier	Schaltertr?ger	
10510.011	10944355	Bow V2	B?gel V2	
10510.012	10723790	Protecting bow	Schutzb?gel	
10510.013	10688866	Flap	Klappe	
10510.014	10765177	Flap left	Klappe links	
10510.015	10765178	Flap right	Klappe rechts	

R 36

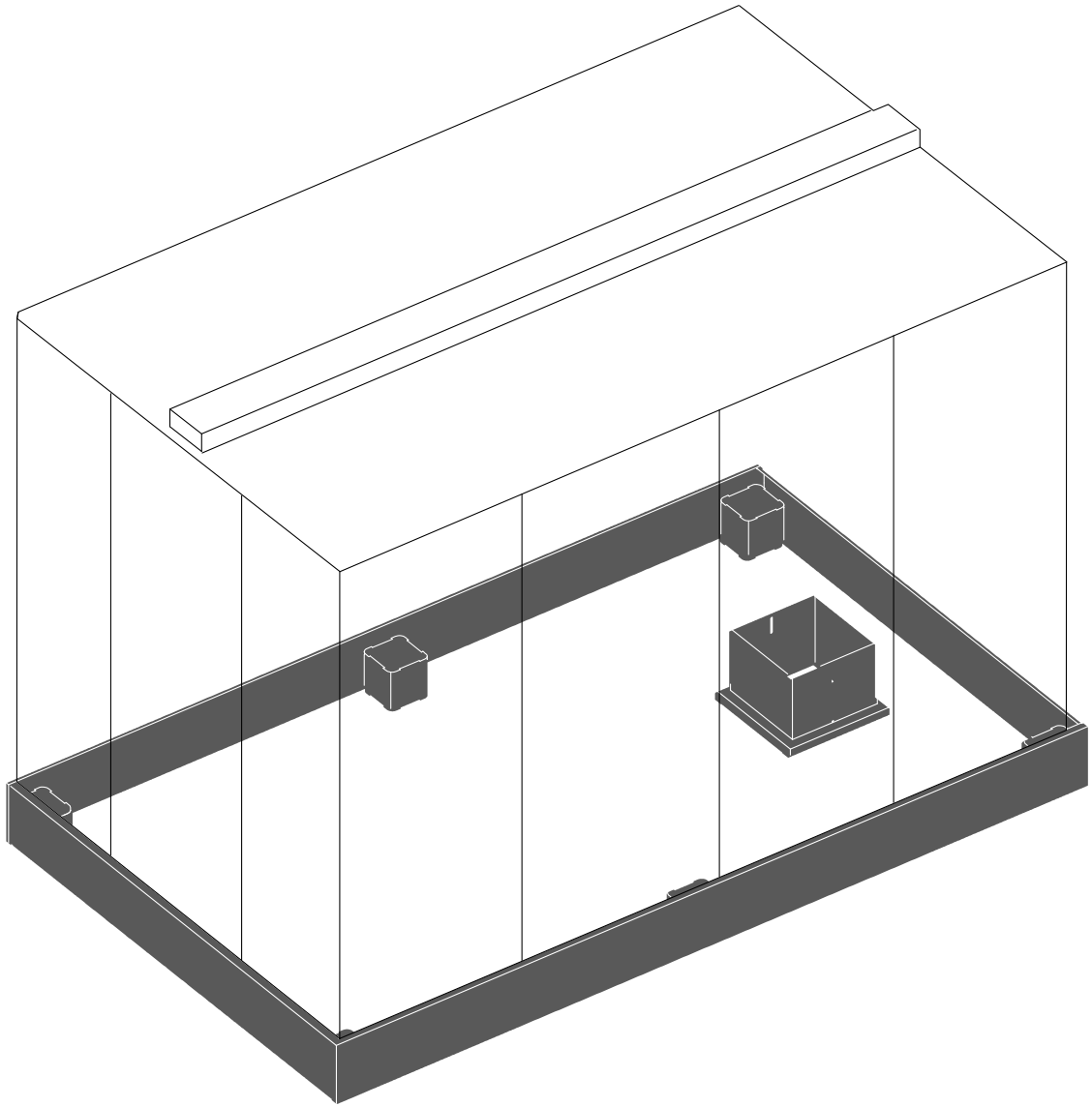

10520

Navi_1_05_20_B01.cgm

R 36

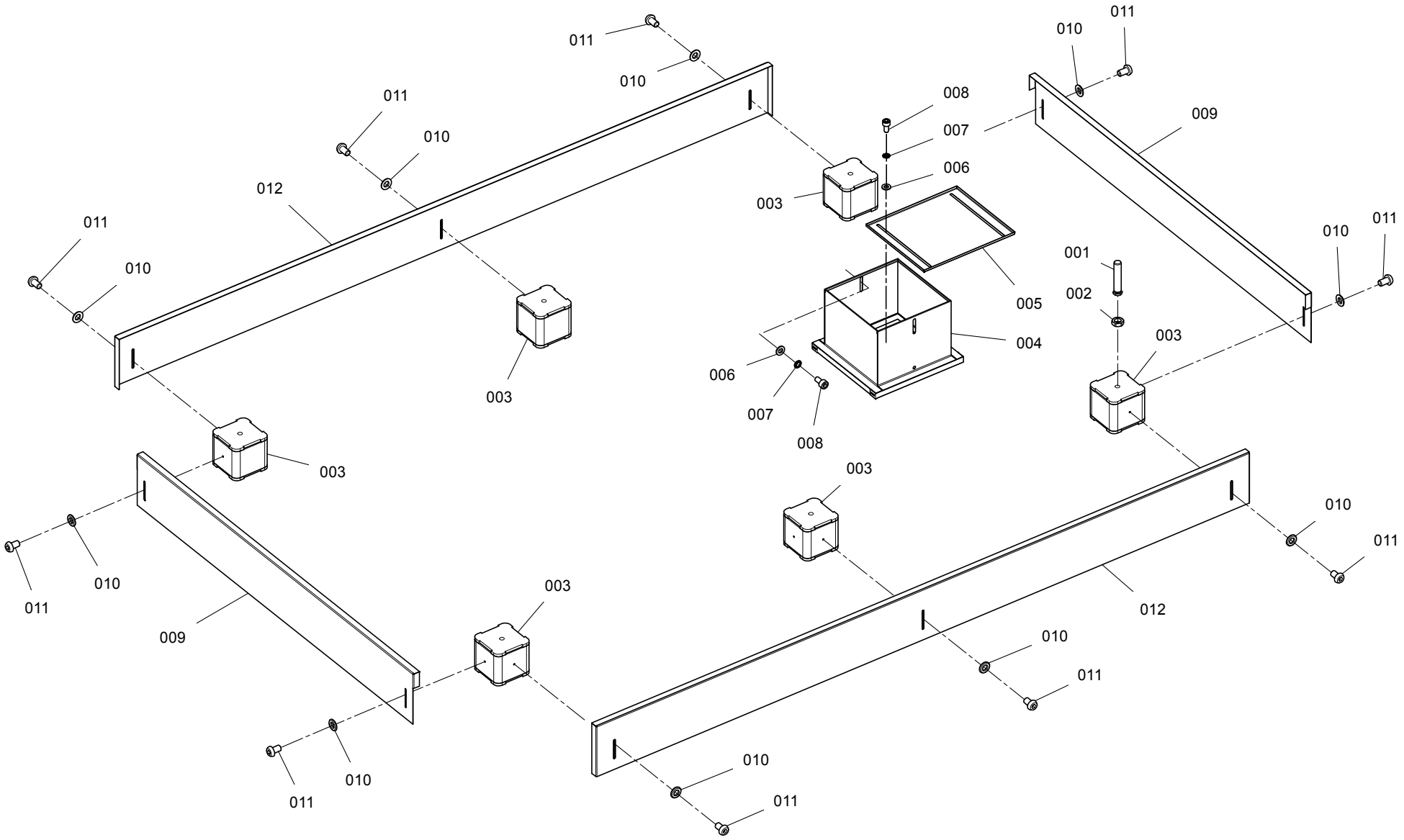

10520

RXX_1_05_20_B101.cgm

Catalogue no. Katalog-Nr.	Part No. Material-Nr.	Part description en	Material-Bezeichnung de	Comment Bemerkung
10520.001	UA3811051	Screw	Schraube	
10520.002	10568237	Hexagon nut M20x1.5-06	6kt-Mutter M20x1.5-06	
10520.003	10704486	Support for frame	Maschinenst?tze	
10520.004	10765991	Frame complete HS 42??	Rahmen komplett HS 42??	
10520.005	10765979	Flap	Klappe	
10520.006	10258850	Washer 6.4-St-140HV	Scheibe 6.4-St-140HV	
10520.007	10258859	Locking washer 6.4/10	Sicherungsscheibe 6.4/10	
10520.008	10258924	Cyl.screw M6x12	Zyl.Schraube M6x12	
10520.009	10921508	Covering	Verkleidung	
10520.010	10354210	Washer 6.4-St-140HV	Scheibe 6.4-St-140HV	
10520.011	10504711	Oval head screw M6x10	Linsenschraube M6x10	
10520.012	10766387	Covering lengthwise	Verkleidung l?ngs	

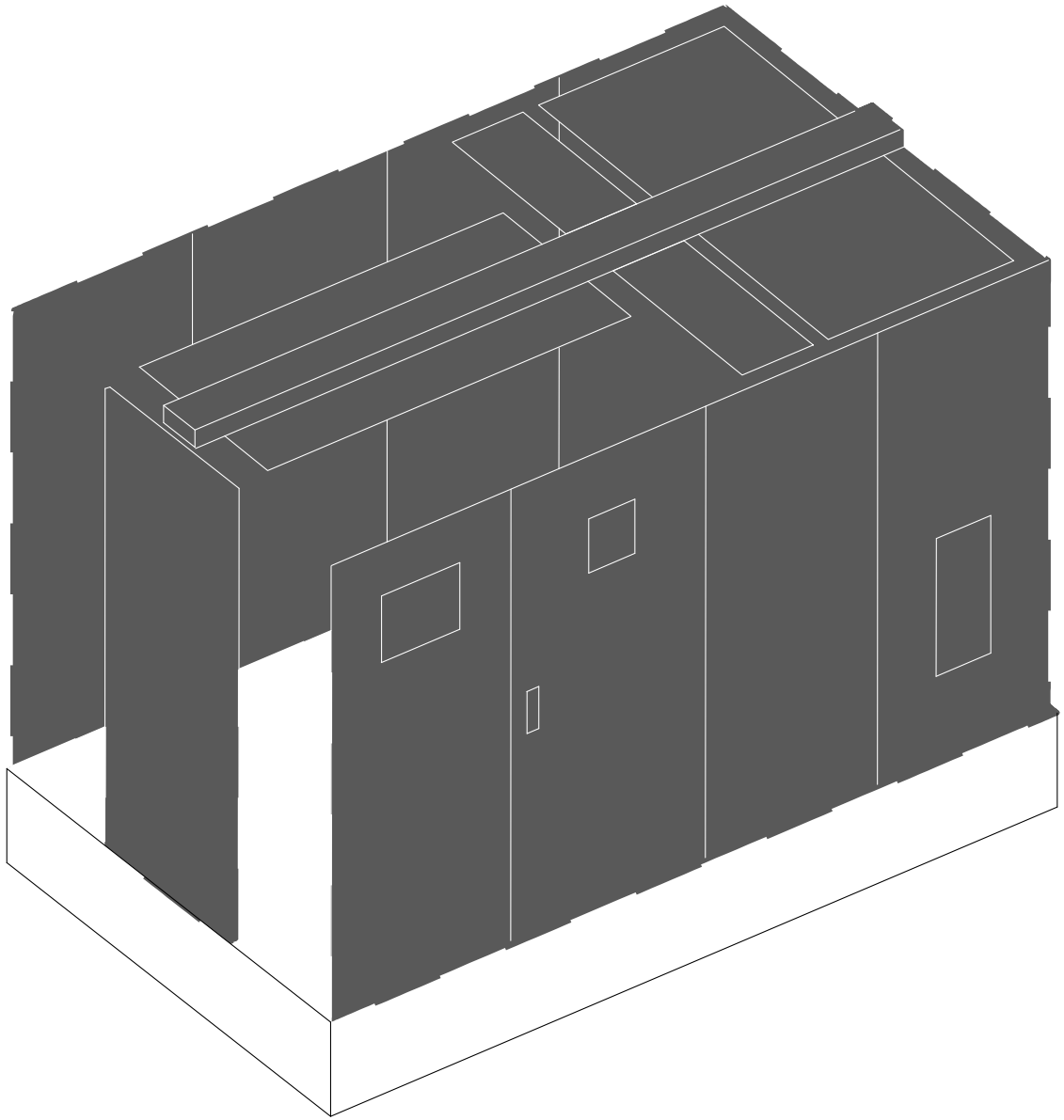

Navi_1_10_01.cgm

R 36

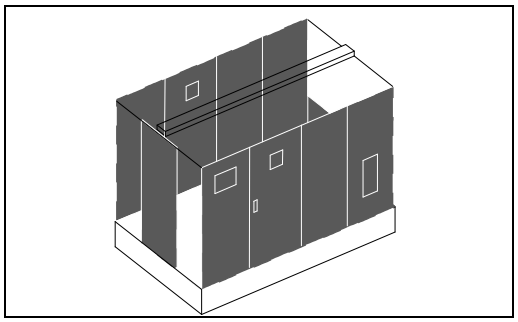

11010

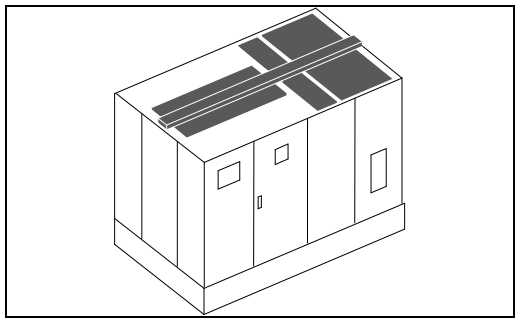

11030

R 36

RIETER

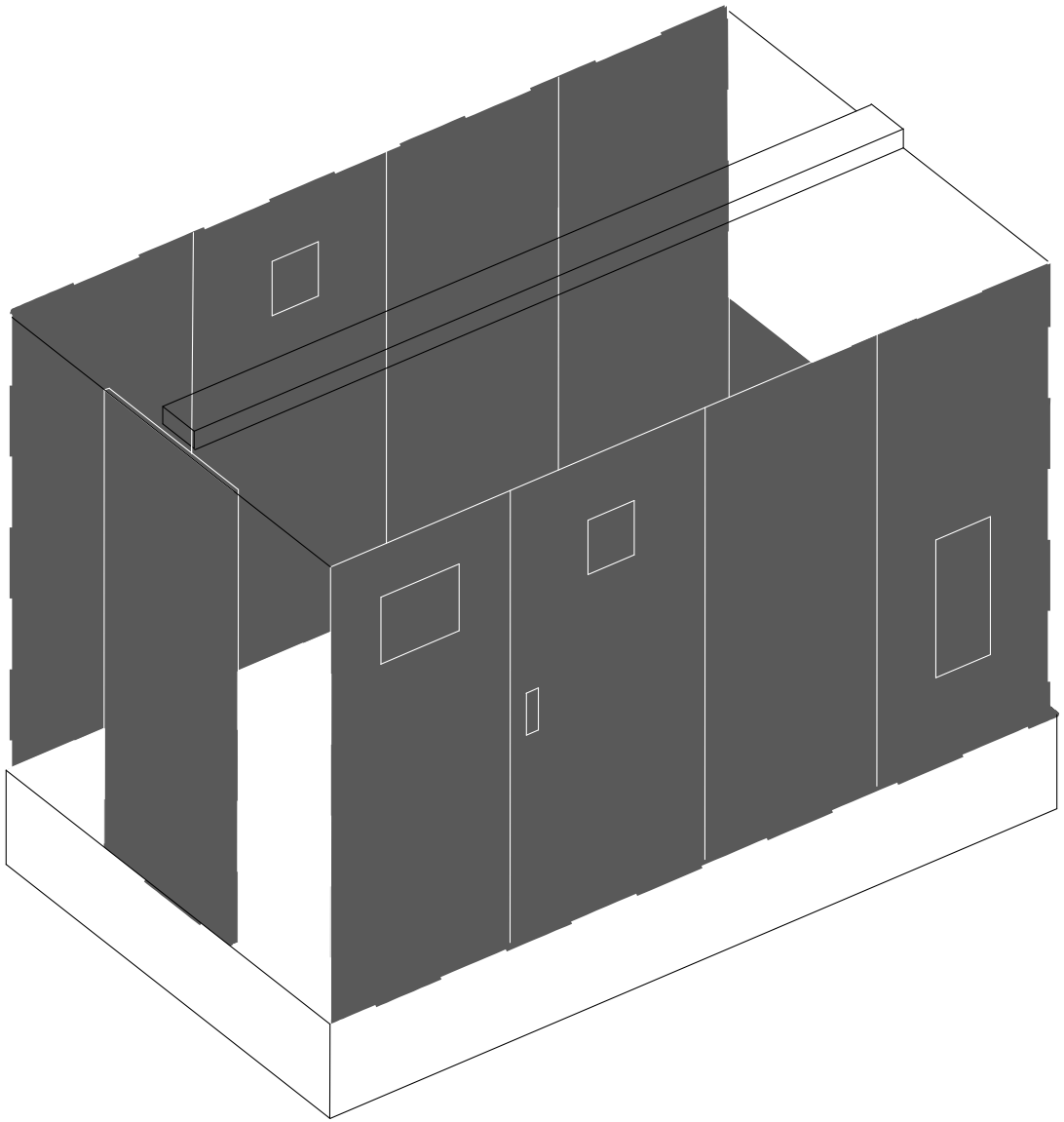

11010

Navi_1_10_10_01.cgm

R 36

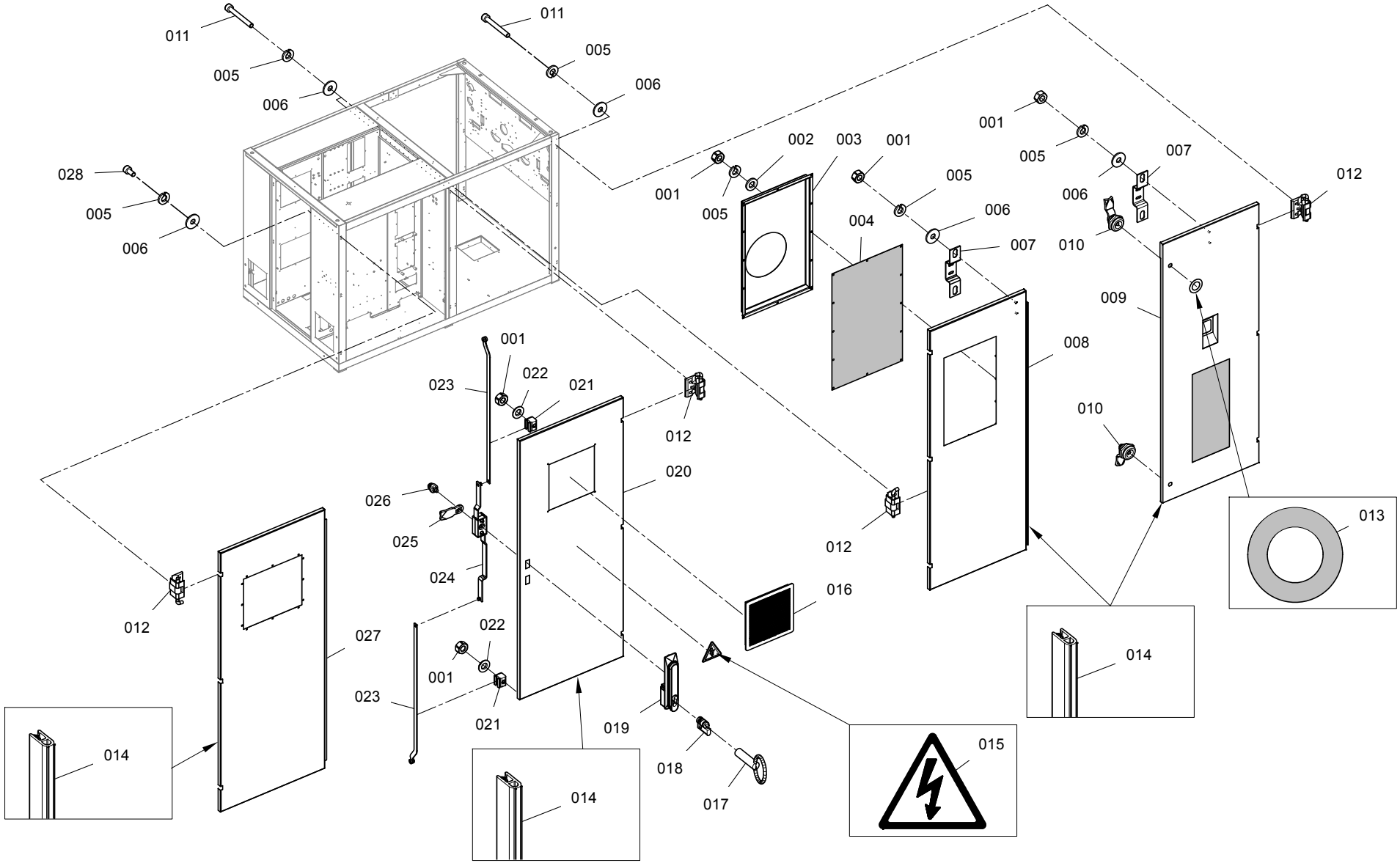

11010

RXX_1_10_10_101.cgm

Catalogue no. Katalog-Nr.	Part No. Material-Nr.	Part description en	Material-Bezeichnung de	Comment Bemerkung
11010.001	10431759	Hexagon nut M6-8	6kt-Mutter M6-8	
11010.002	10456142	Washer 6.4-St-200HV	Scheibe 6.4-St-200HV	
11010.003	10725505	Suction frame R	Ansaugrahmen R	
11010.004	10728054	Mesh motor R	Gitter Motor R	
11010.005	10258859	Locking washer 6.4/10	Sicherungsscheibe 6.4/10	
11010.006	10258855	Washer 6.4-St-100HV	Scheibe 6.4-St-100HV	
11010.007	10382306	Holder	Halter	
11010.008	10717121	Door welded M1	T?r geschweisst M1	
11010.009	10700015	Door welded M2	T?r geschweisst M2	
11010.010	10691713	Lock	Schloss	
11010.011	10258935	Cyl.screw M6x50	Zyl.Schraube M6x50	
11010.012	10002651	Hinge light green 2	Scharnier hellgr?n 2	
11010.013	10472405	Lock shield red 51/31	Schlossschild rot 51/31	
11010.014	10615460	Profile 20x11-EPDM	Profil 20x11-EPDM	
11010.015	10356570	Warning sign W012-50	Warnschild W012-50	
11010.016	10819782	Filter outlet SG600,300	Filter Abzug SG600,300	
11010.017	10624743	Key 8	Schl?ssel 8	
11010.018	10704813	Insert 211-9207	Einsatz 211-9207	
11010.019	U75500016	Lever door 207-9201	Hebel T?r 207-9201	
11010.020	10757935	Door welded E2	T?r geschweisst E2	
11010.021	U75500020	Guide 208-1501.03	F?hrung 208-1501.03	
11010.022	10354210	Washer 6.4-St-140HV	Scheibe 6.4-St-140HV	
11010.023	10757931	Rod long	Stange lang	
11010.024	U75500017	Pole lock 208-9003	Stangenschloss 208-9003	
11010.025	U75500018	Tongue 200-0418	Zunge 200-0418	
11010.026	U75500019	Adapter 208-9403	Adapter 208-9403	
11010.027	10699392	Door welded E1	T?r geschweisst E1	
11010.028	10258924	Cyl.screw M6x12	Zyl.Schraube M6x12	

R 36

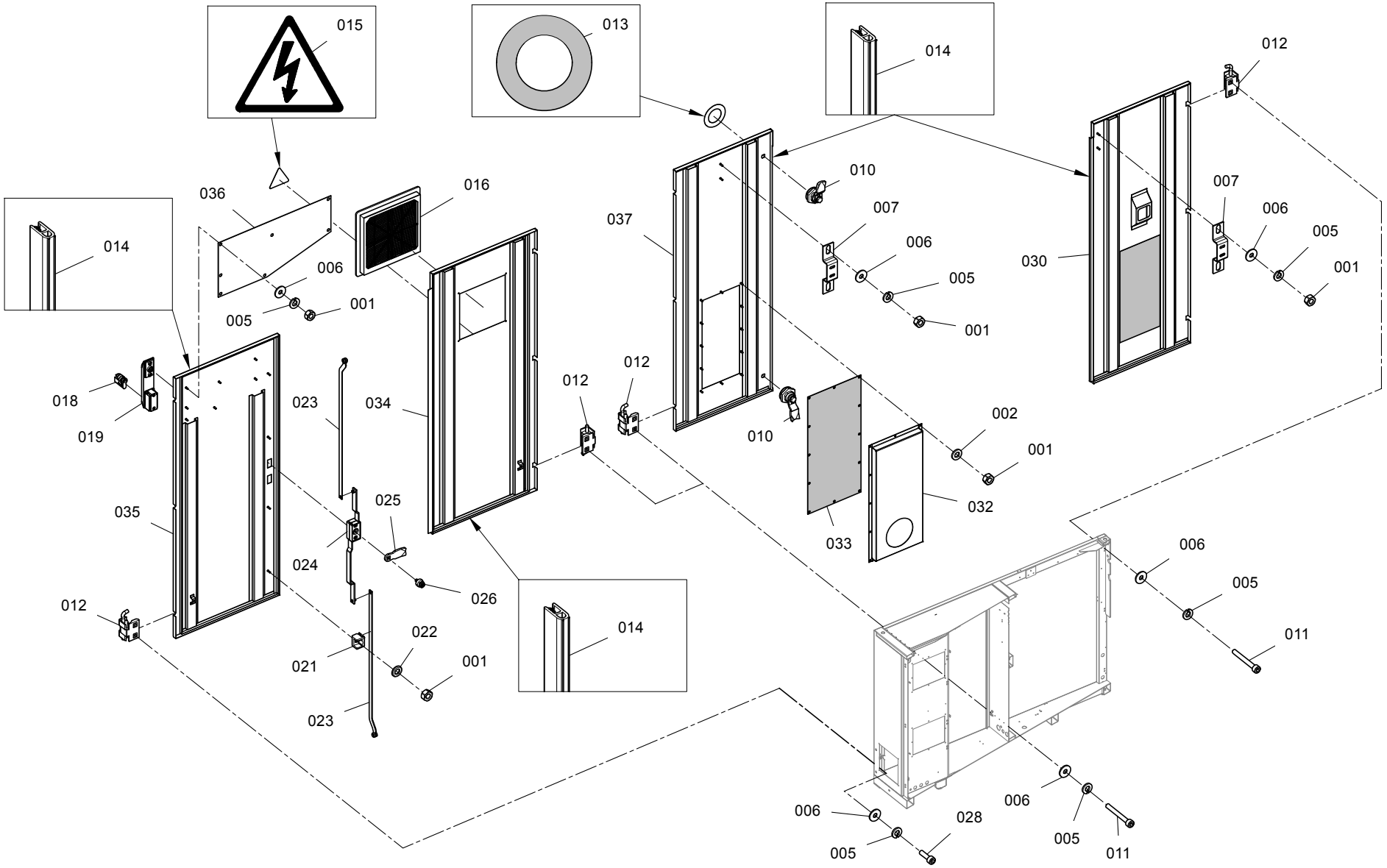

11010

RXX_1_10_10_201.cgm

Catalogue no. Katalog-Nr.	Part No. Material-Nr.	Part description en	Material-Bezeichnung de	Comment Bemerkung
11010.001	10431759	Hexagon nut M6-8	6kt-Mutter M6-8	
11010.002	10456142	Washer 6.4-St-200HV	Scheibe 6.4-St-200HV	
11010.005	10258859	Locking washer 6.4/10	Sicherungsscheibe 6.4/10	
11010.006	10258855	Washer 6.4-St-100HV	Scheibe 6.4-St-100HV	
11010.007	10382306	Holder	Halter	
11010.010	10691713	Lock	Schloss	
11010.011	10258935	Cyl.screw M6x50	Zyl.Schraube M6x50	
11010.012	10002651	Hinge light green 2	Scharnier hellgr?n 2	
11010.013	10472405	Lock shield red 51/31	Schlossschild rot 51/31	
11010.014	10615460	Profile 20x11-EPDM	Profil 20x11-EPDM	
11010.015	10356570	Warning sign W012-50	Warnschild W012-50	
11010.016	10819782	Filter outlet SG600,300	Filter Abzug SG600,300	
11010.018	10704813	Insert 211-9207	Einsatz 211-9207	
11010.019	U75500016	Lever door 207-9201	Hebel T?r 207-9201	
11010.021	U75500020	Guide 208-1501.03	F?hrung 208-1501.03	
11010.022	10354210	Washer 6.4-St-140HV	Scheibe 6.4-St-140HV	
11010.023	10757931	Rod long	Stange lang	
11010.024	U75500017	Pole lock 208-9003	Stangenschloss 208-9003	
11010.025	U75500018	Tongue 200-0418	Zunge 200-0418	
11010.026	U75500019	Adapter 208-9403	Adapter 208-9403	
11010.028	10258924	Cyl.screw M6x12	Zyl.Schraube M6x12	
11010.030	10699844	Door welded M3	T?r geschweisst M3	
11010.032	10702726	Box fan U	Schachtel Ventilator U	
11010.033	10723390	Mesh motor VV	Gitter Motor VV	
11010.034	10699696	Door welded E3	T?r geschweisst E3	
11010.035	10988882	Door welded E4	T?r geschweisst E4	
11010.036	10692528	Underlying plate	Unterlegplatte	
11010.037	10699820	Door welded M4	T?r geschweisst M4	

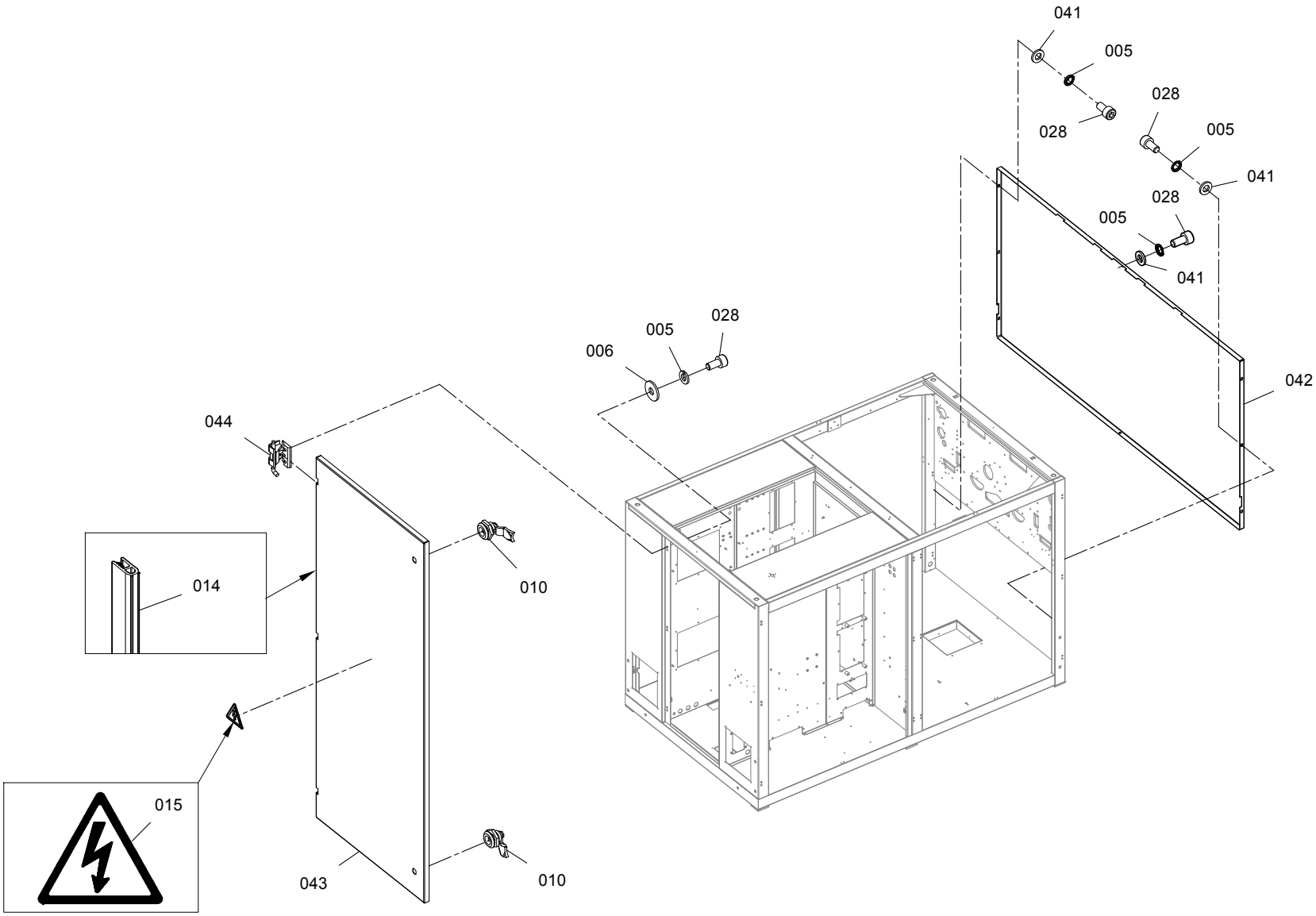

RXX_1_10_10_301.cgm

Catalogue no. Katalog-Nr.	Part No. Material-Nr.	Part description en	Material-Bezeichnung de	Comment Bemerkung
11010.005	10258859	Locking washer 6.4/10	Sicherungsscheibe 6.4/10	
11010.006	10258855	Washer 6.4-St-100HV	Scheibe 6.4-St-100HV	
11010.010	10691713	Lock	Schloss	
11010.014	10615460	Profile 20x11-EPDM	Profil 20x11-EPDM	
11010.015	10356570	Warning sign W012-50	Warnschild W012-50	
11010.028	10258924	Cyl.screw M6x12	Zyl.Schraube M6x12	
11010.041	10258850	Washer 6.4-St-140HV	Scheibe 6.4-St-140HV	
11010.042	10927168	Front cover	Frontverdeck	
11010.043	10938305	Door welded E5 V2	T?r geschweisst E5 V2	
11010.044	10255246	Hinge dark green 2	Scharnier dunkelgr?n 2	

R 36

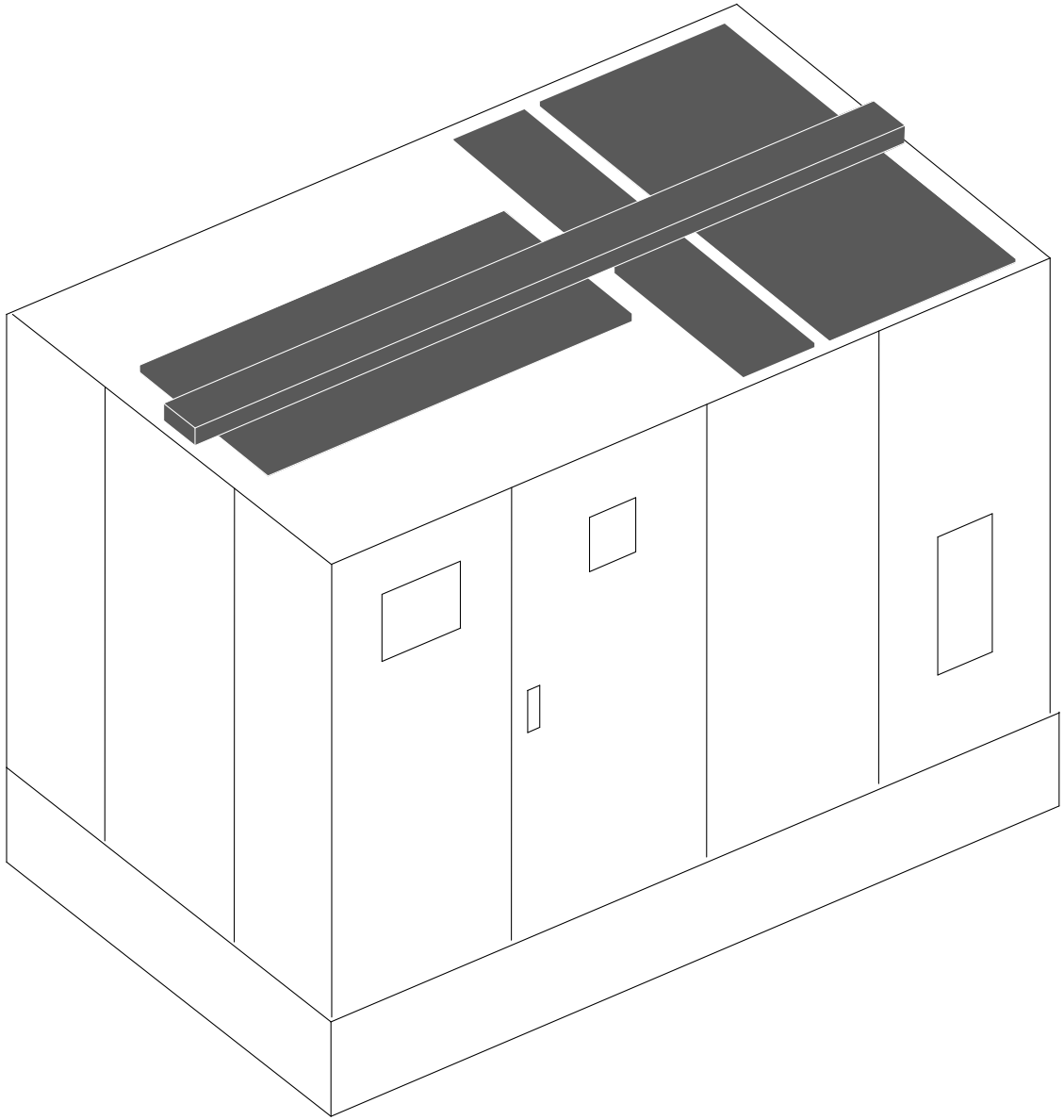

11030

Navi_1_10_30_01.cgm

R 36

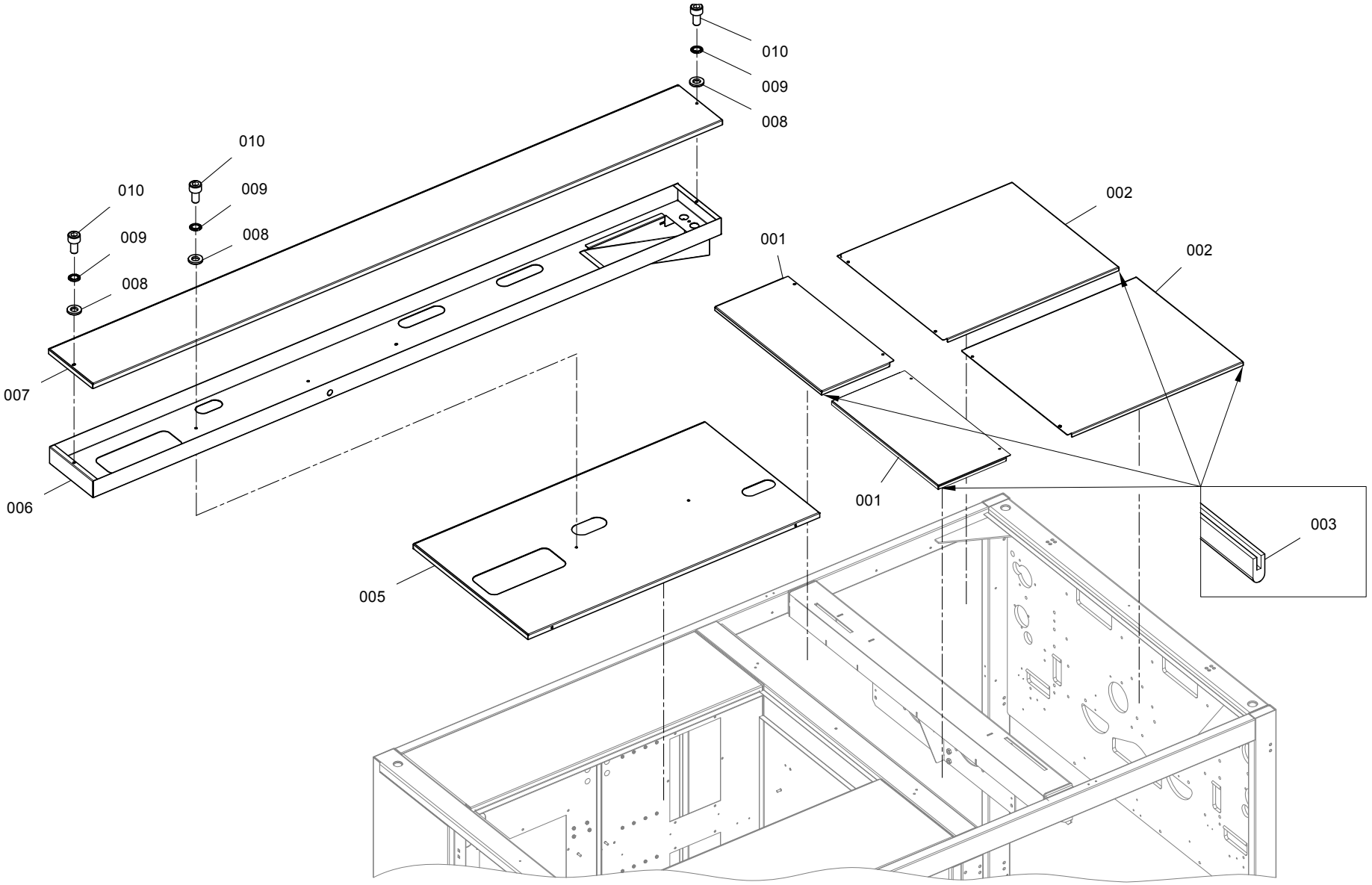

11030

RXX_1_10_30_101.cgm

58361

Catalogue no. Katalog-Nr.	Part No. Material-Nr.	Part description en	Material-Bezeichnung de	Comment Bemerkung
11030.001	10704959	Lid I	Deckel I	
11030.002	10704961	Lid II	Deckel II	
11030.003	10615460	Profile 20x11-EPDM	Profil 20x11-EPDM	
11030.005	10936721	Lid welded E	Deckel geschweisst E	
11030.006	10927111	Cable channel welded E	Kabelf?hrungskanal geschweisst E	
11030.007	10927151	Cable channel covering E	Kabelf?hrungskanal Verkleidung E	
11030.008	10258850	Washer 6.4-St-140HV	Scheibe 6.4-St-140HV	
11030.009	10258859	Locking washer 6.4/10	Sicherungsscheibe 6.4/10	
11030.010	10258924	Cyl.screw M6x12	Zyl.Schraube M6x12	

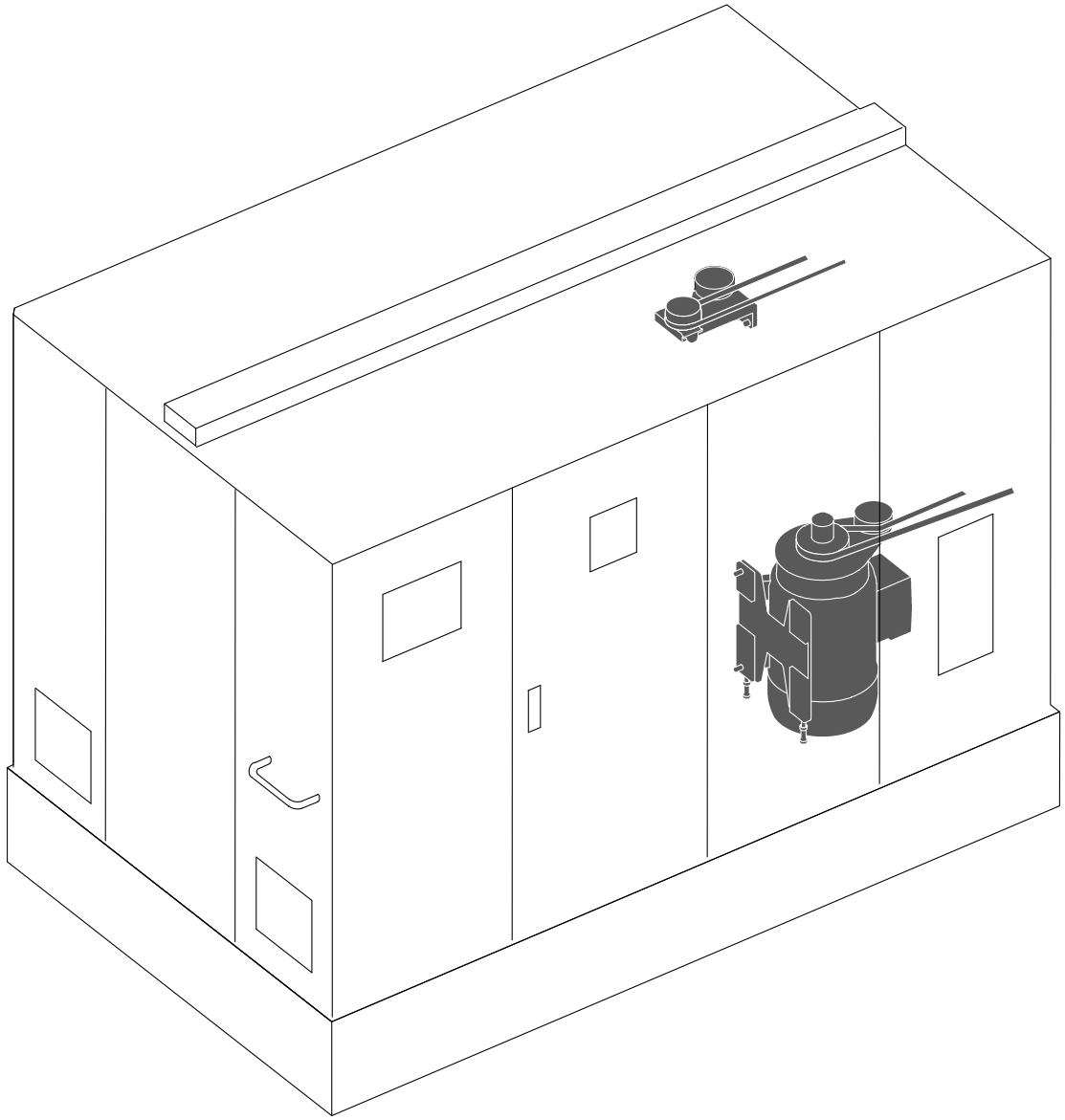

Navi_1_20_01.cgm

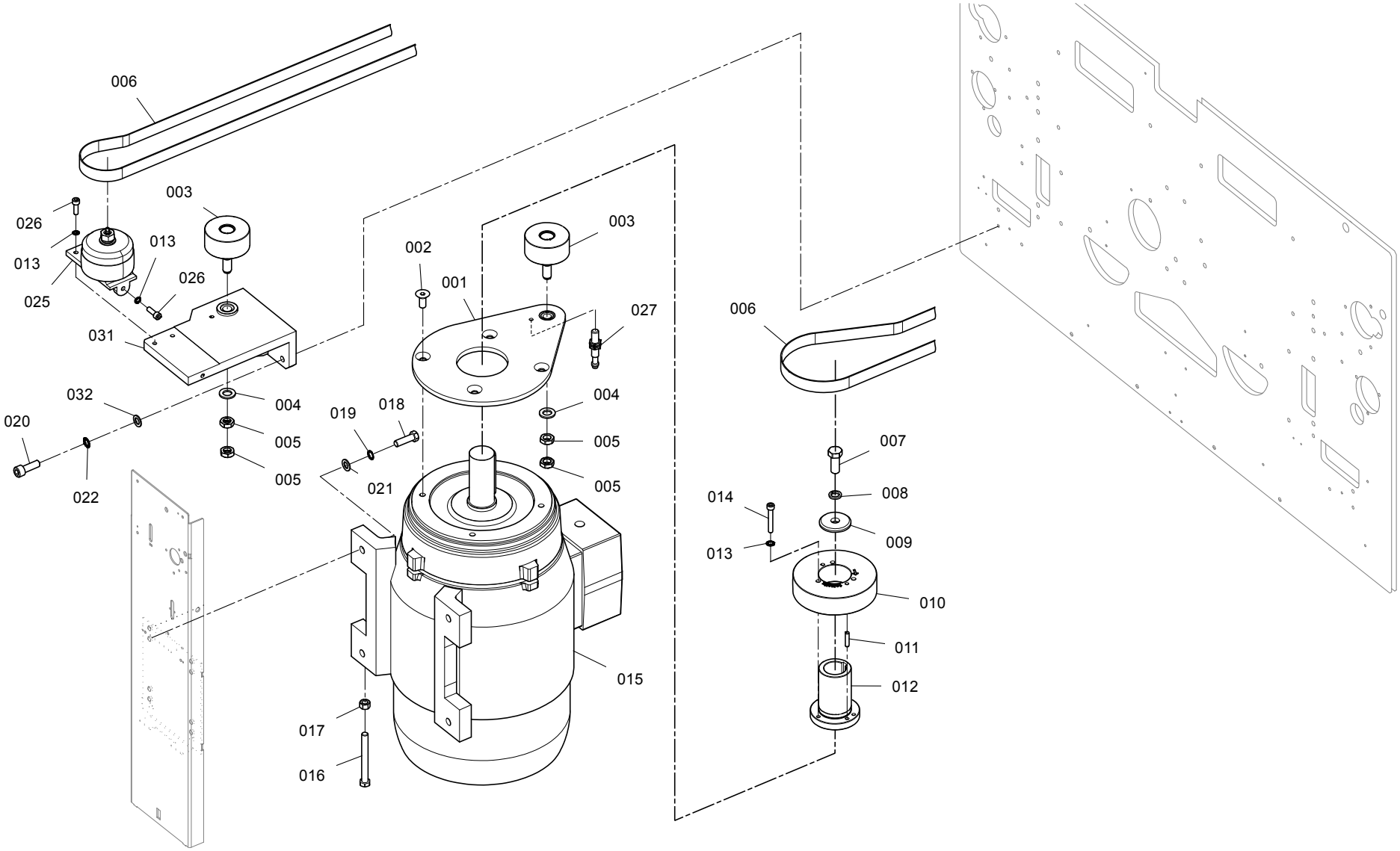

RXX_1_20_A101.cgm

Catalogue no. Katalog-Nr.	Part No. Material-Nr.	Part description en	Material-Bezeichnung de	Comment Bemerkung
120.001	10957849	Console pulley	Konsole Riemenscheibe	
120.002	10160838	Socket flat head screw M12x30	Senkschraube M12x30	
120.003	10950466	Measuring bolt pulley V2	Messbolzen Riemenscheibe V2	
120.004	10478064	Washer 17-St-200HV	Scheibe 17-St-200HV	
120.005	10480945	Hexagon nut M16x1.5-04	6kt-Mutter M16x1.5-04	
120.006	10984541	Belt TC-35ER 25x103300 +/-60	Riemen TC-35ER 25x103300 +/-60	
120.007	10243642	Hex. screw M16x40	6kt-Schraube M16x40	
120.008	10483783	Locking washer 17/24	Sicherungsscheibe 17/24	
120.009	10764967	Washer 48	Scheibe 48	
120.010	10938772	Pulley 7,5/50Hz 9/60Hz R35 V2	Riemenscheibe 7,5/50Hz 9/60Hz R35 V2	
120.010	10938773	Pulley 8/50Hz 9,5/60Hz R35 V2	Riemenscheibe 8/50Hz 9,5/60Hz R35 V2	
120.010	10938782	Pulley 7/50Hz 8,5/60Hz R35 V2	Riemenscheibe 7/50Hz 8,5/60Hz R35 V2	
120.010	10938785	Pulley 8,5/50Hz R35 V2	Riemenscheibe 8,5/50Hz R35 V2	
120.010	10938786	Pulley 9/50Hz R35 V2	Riemenscheibe 9/50Hz R35 V2	
120.010	10938787	Pulley 9,5/50Hz R35 V2	Riemenscheibe 9,5/50Hz R35 V2	
120.010	10938788	Pulley 10/50Hz R35 V2	Riemenscheibe 10/50Hz R35 V2	
120.011	10592473	Cylindrical pin 6m6x26	Zylinderstift 6m6x26	
120.012	10758595	Hub CR 48	Nabe CR 48	
120.013	10259660	Locking washer 8.4/13	Sicherungsscheibe 8.4/13	
120.014	10504736	Cyl.screw M8x55	Zyl.Schraube M8x55	
120.015	10842289	Motor B34T 18.5KW IE3	Motor B34T 18.5KW IE3	
120.016	10259191	Hex. screw M12x110	6kt-Schraube M12x110	
120.017	10431841	Hexagon nut M12-8	6kt-Mutter M12-8	
120.018	10259190	Hex. screw M12x45	6kt-Schraube M12x45	
120.019	10483782	Locking washer 13/18	Sicherungsscheibe 13/18	
120.020	10258966	Cyl.screw M10x30	Zyl.Schraube M10x30	
120.021	10455614	Washer 13-St-200HV	Scheibe 13-St-200HV	
120.022	10259423	Locking washer 10.5/16	Sicherungsscheibe 10.5/16	
120.025	U90310139	Pulley complete VLT 139	Riemenscheibe komplett VLT 139	

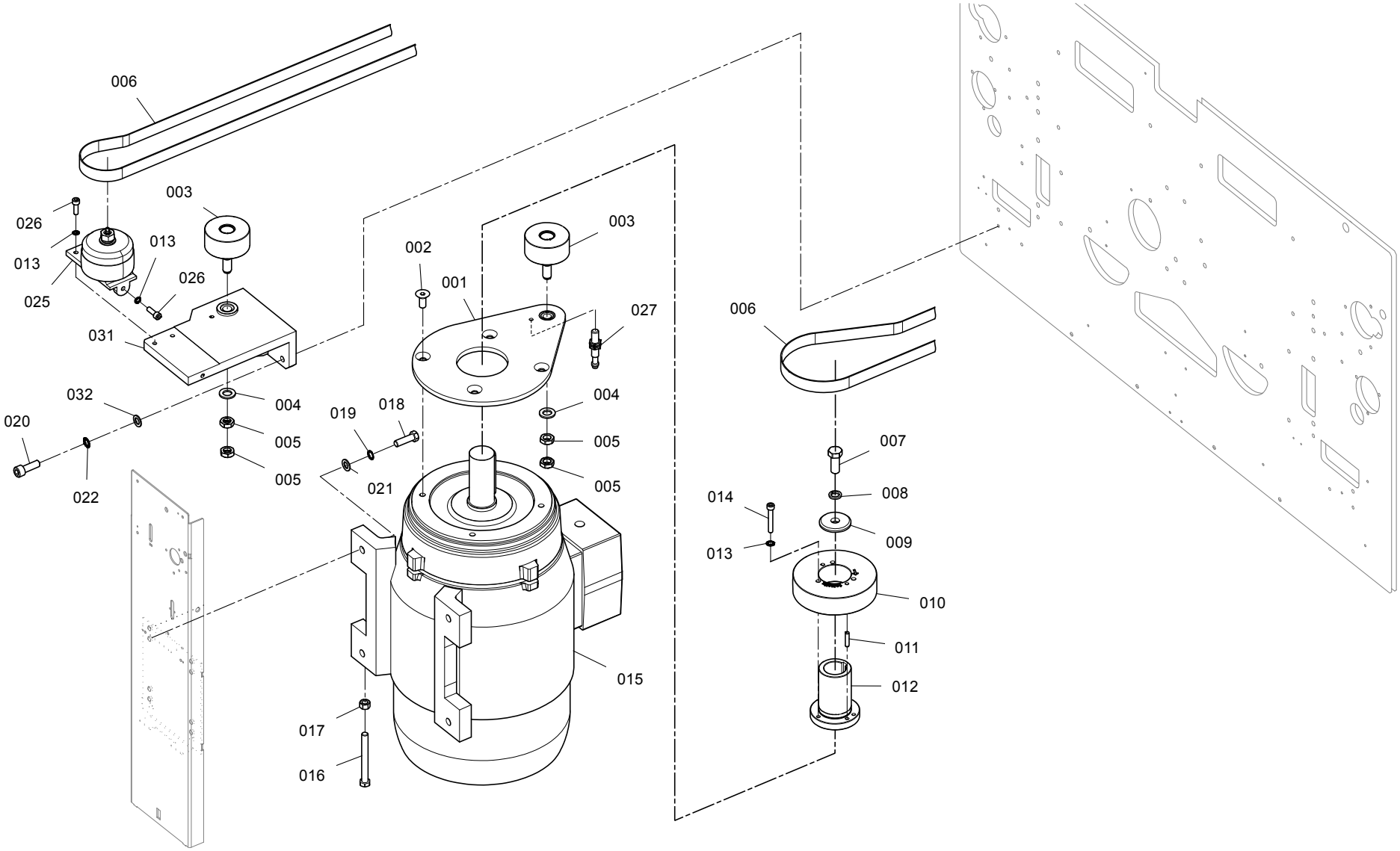

RXX_1_20_A101.cgm

Catalogue no. Katalog-Nr.	Part No. Material-Nr.	Part description en	Material-Bezeichnung de	Comment Bemerkung
120.026	10258949	Cyl.screw M8x25	Zyl.Schraube M8x25	
120.027	10530381	Initiator IME08-1B5PSZT0S DC10-30V	Initiator IME08-1B5PSZT0S DC10-30V	
120.031	10950588	Holder machined OR HS V2.1	Halter bearbeitet OR HS V2.1	
120.032	10687231	Washer 10.5-St-140HV	Scheibe 10.5-St-140HV	

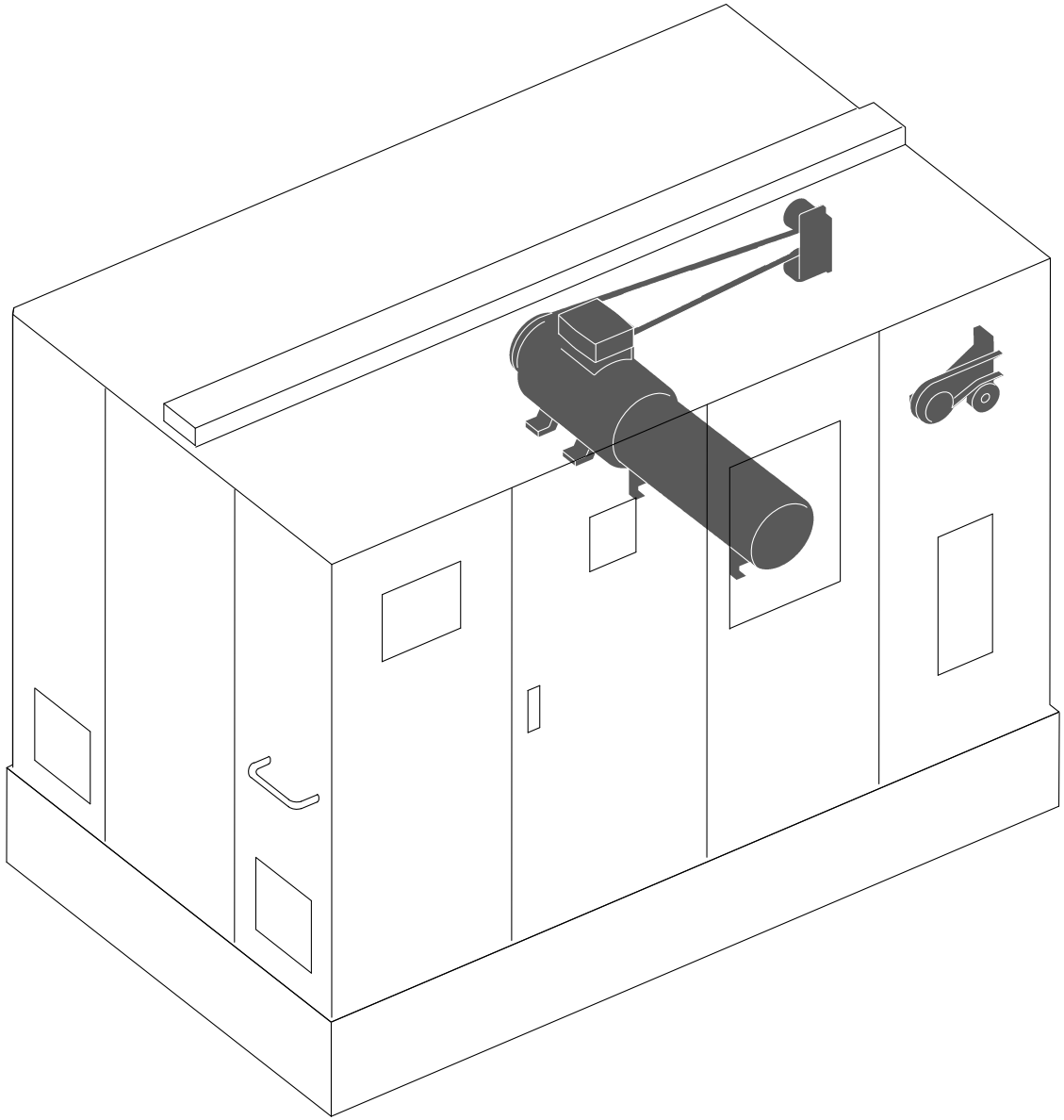

Navi_1_25_01.cgm

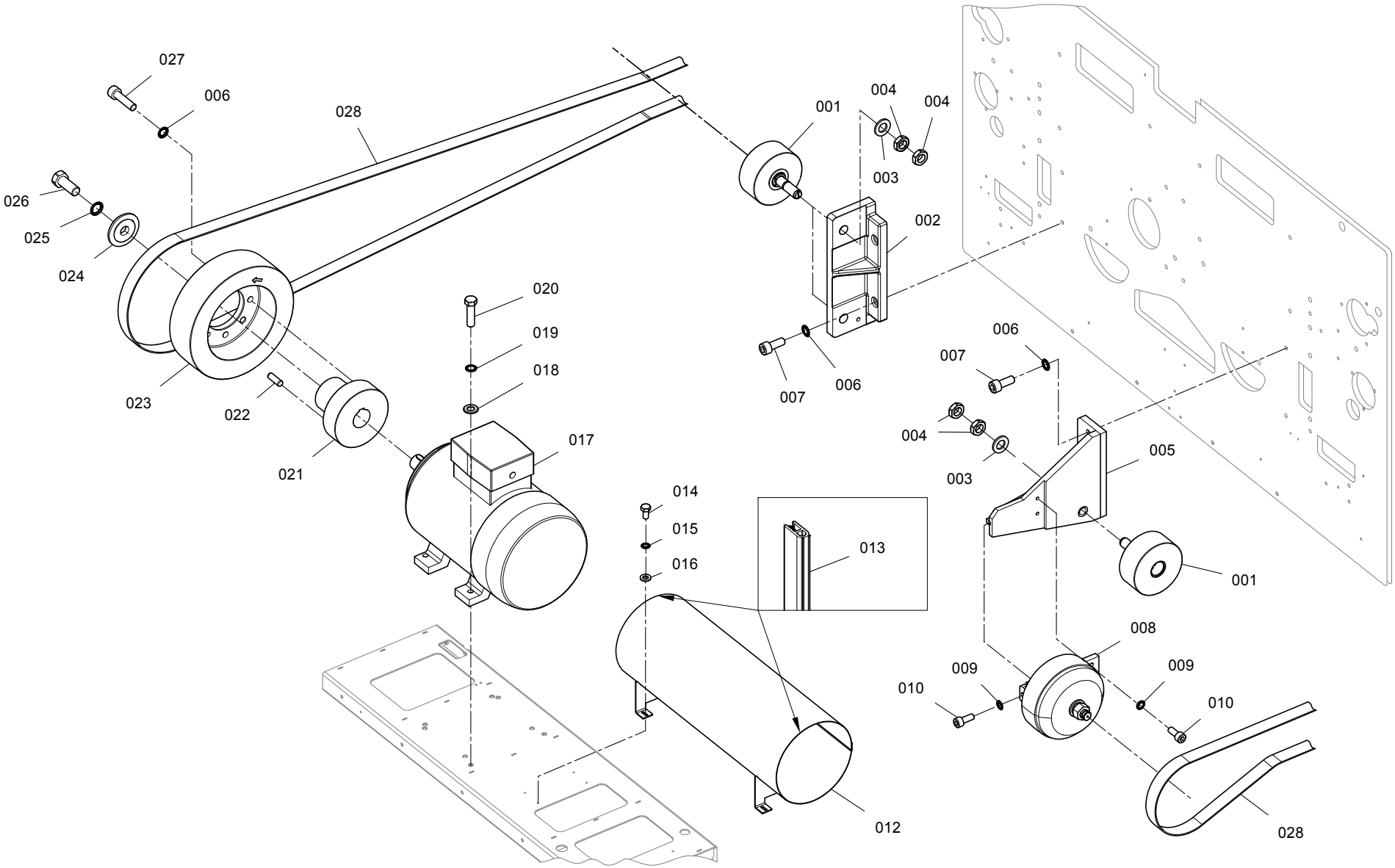

RXX_1_25_101.cgm

Catalogue no. Katalog-Nr.	Part No. Material-Nr.	Part description en	Material-Bezeichnung de	Comment Bemerkung
125.001	UE3022921	Guiding roller	F?hrungsrolle	
125.002	10723154	Scanning roller holder	Abtastrolle Halter	
125.003	10478064	Washer 17-St-200HV	Scheibe 17-St-200HV	
125.004	10480945	Hexagon nut M16x1.5-04	6kt-Mutter M16x1.5-04	
125.005	10932600	Holder machined	Halter bearbeitet	
125.006	10259423	Locking washer 10.5/16	Sicherungsscheibe 10.5/16	
125.007	10241974	Cyl.screw M10x25	Zyl.Schraube M10x25	
125.008	U90310136	Rotor pulley VLT 080	Rotor Riemenscheibe VLT 080	
125.009	10259660	Locking washer 8.4/13	Sicherungsscheibe 8.4/13	
125.010	10258948	Cyl.screw M8x20	Zyl.Schraube M8x20	
125.012	11017430	Suction port welded M22kW	Ansaugstutzen geschweisst M22kW	
125.013	10615460	Profile 20x11-EPDM	Profil 20x11-EPDM	
125.014	10258828	Cyl.screw M6x16	Zyl.Schraube M6x16	
125.015	10258859	Locking washer 6.4/10	Sicherungsscheibe 6.4/10	
125.016	10456142	Washer 6.4-St-200HV	Scheibe 6.4-St-200HV	
125.017	10842287	Motor rotor B3T 22KW IE3	Motor Rotor B3T 22KW IE3	
125.018	10455614	Washer 13-St-200HV	Scheibe 13-St-200HV	
125.019	10483782	Locking washer 13/18	Sicherungsscheibe 13/18	
125.020	10259190	Hex. screw M12x45	6kt-Schraube M12x45	
125.021	10758761	Hub rotor D48	Nabe Rotor D48	
125.022	10356629	Cylindrical pin 10m6x30	Zylinderstift 10m6x30	
125.023	10735267	Pulley D212	Riemenscheibe D212	
125.024	10764967	Washer 48	Scheibe 48	
125.025	10483783	Locking washer 17/24	Sicherungsscheibe 17/24	
125.026	10243642	Hex. screw M16x40	6kt-Schraube M16x40	
125.027	10258966	Cyl.screw M10x30	Zyl.Schraube M10x30	
125.028	10984179	Belt TC-35ER 25x104950 +/-60	Riemen TC-35ER 25x104950 +/-60	

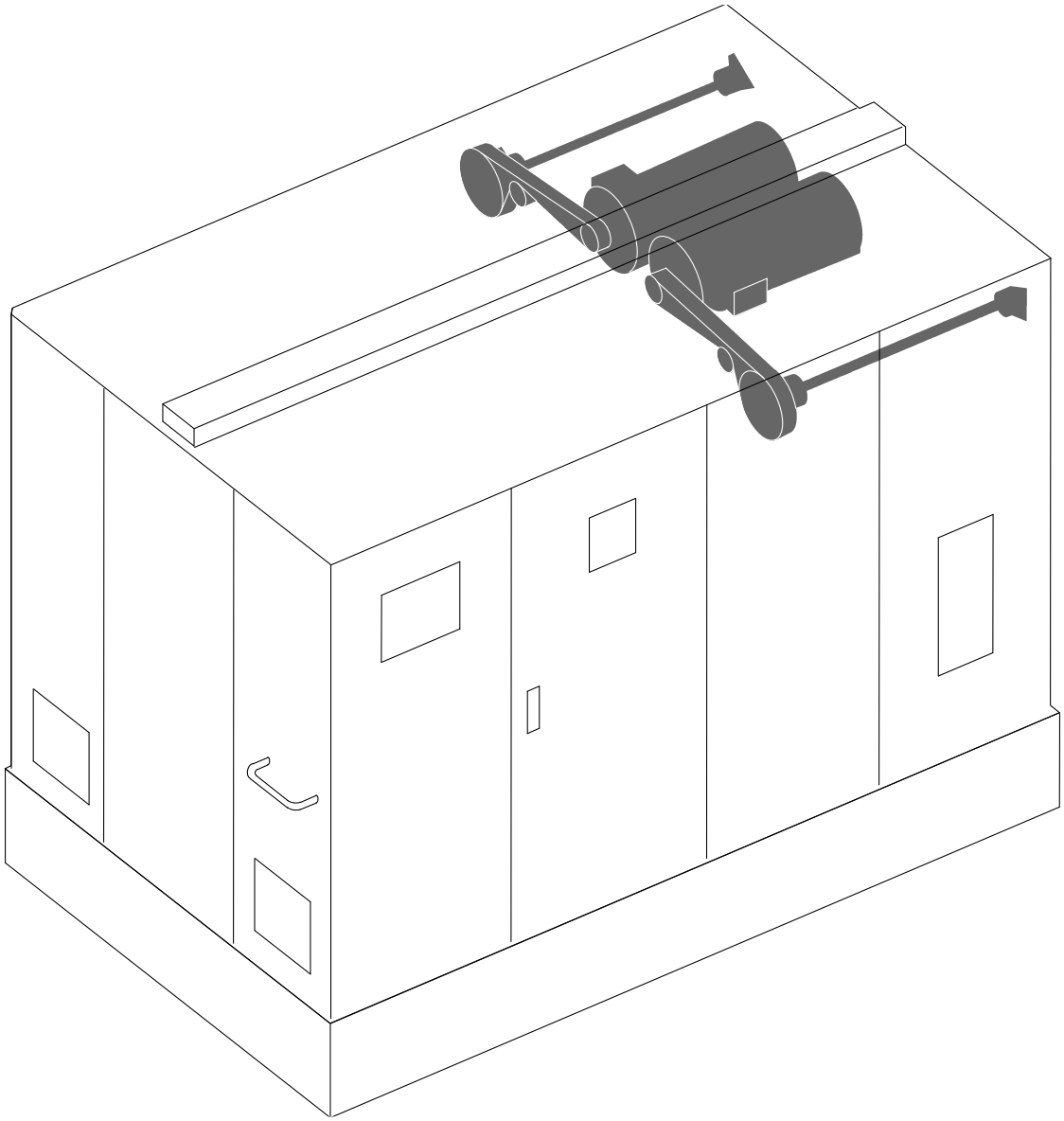

Navi_1_35_01.cgm

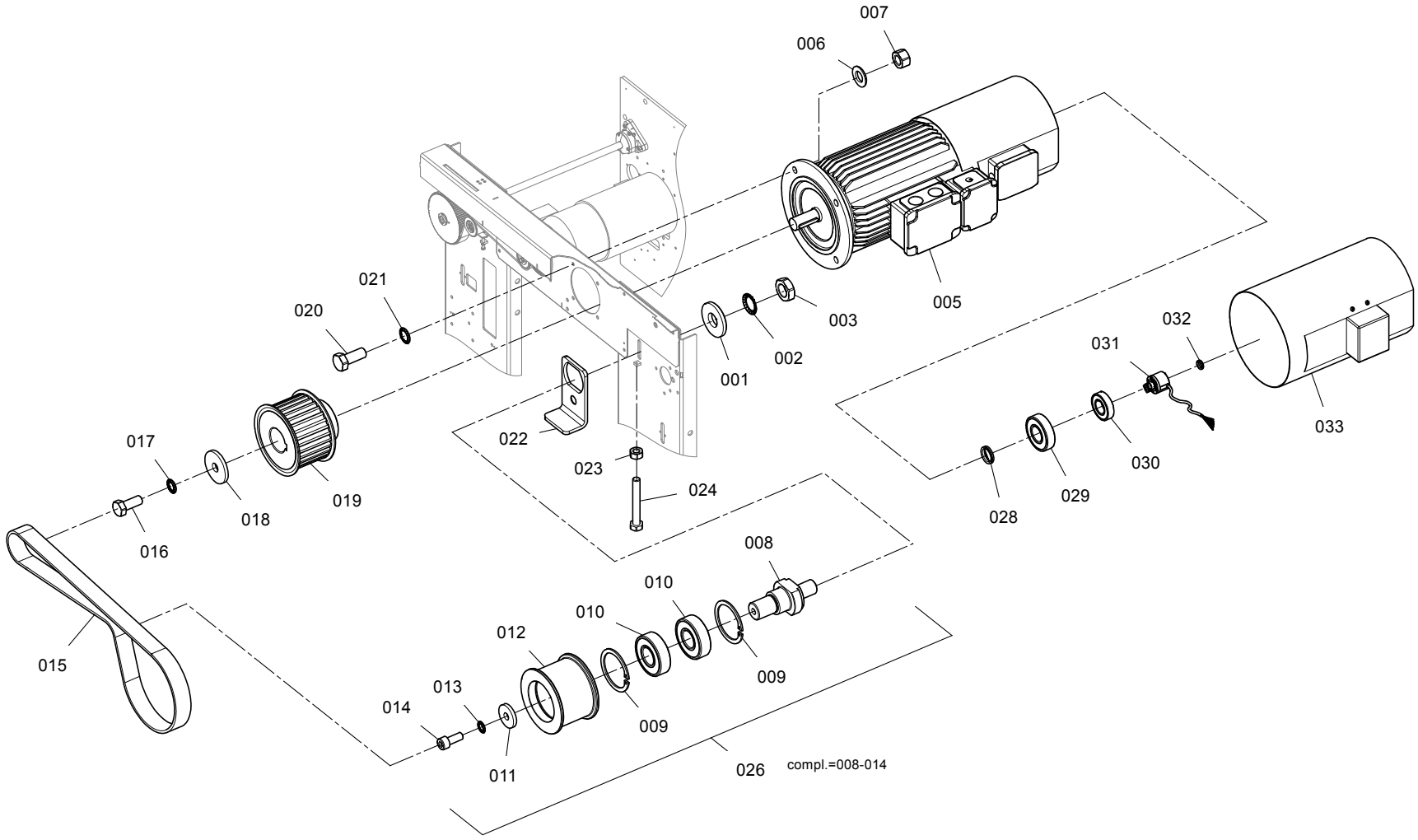
007
006
005
003
002
001
021
020
022
023
024
017
018
019
016
015
008
010
010
012
009
009
013
014
011
026
compl.=008-014
032
031
033
030
029
028

Catalogue no. Katalog-Nr.	Part No. Material-Nr.	Part description en	Material-Bezeichnung de	Comment Bemerkung
135.001	10688422	Washer	Scheibe	
135.002	10483783	Locking washer 17/24	Sicherungsscheibe 17/24	
135.003	10480945	Hexagon nut M16x1.5-04	6kt-Mutter M16x1.5-04	
135.005	10842703	Motor B5T 4KW Enc IE3	Motor B5T 4KW Enc IE3	
135.006	10455614	Washer 13-St-200HV	Scheibe 13-St-200HV	
135.007	10431841	Hexagon nut M12-8	6kt-Mutter M12-8	
135.008	11053941	Bearing bolt	Lagerbolzen	
135.009	10355083	Locking ring 47x1.75	Sicherungsring 47x1.75	
135.010	10471945	Deep-groove ball bearing 20/47x14-6204-2	Ri.Kugellager 20/47x14-6204-2Z	
135.012	11026378	Washer	Scheibe	
135.012	11051011	Pulley	Riemenscheibe	
135.013	10461551	Locking washer 8.4/13	Sicherungsscheibe 8.4/13	
135.014	10258948	Cyl.screw M8x20	Zyl.Schraube M8x20	
135.015	U82421513	Toothed belt PGGT3 1512-8MGT-40	Zahnriemen PGGT3 1512-8MGT-40	
135.016	10259092	Hex. screw M10x25	6kt-Schraube M10x25	
135.017	10259662	Locking washer 10.5/16	Sicherungsscheibe 10.5/16	
135.018	10705180	Washer	Scheibe	
135.019	10764545	Cogged belt wheel complete Z30	Zahnriemenrad komplett Z30	
135.020	10259098	Hex. screw M12x35	6kt-Schraube M12x35	
135.021	10483782	Locking washer 13/18	Sicherungsscheibe 13/18	
135.022	10722078	Kicker plate	Schiebeblech	
135.023	10259607	Hexagon nut M8-8	6kt-Mutter M8-8	
135.024	10490981	Hex. screw M8x60	6kt-Schraube M8x60	
135.026	11027049	Tension roller	Spannrolle	
135.028	10999014	V-ring 31x7.5	V-Ring 31x7.5	
135.029	10992548	Deep-groove ball bearing 35/80x21-6307-2	Ri.Kugellager 35/80x21-6307-2Z	
135.030	10992546	Deep-groove ball bearing 30/62x16-6206-2	Ri.Kugellager 30/62x16-6206-2Z	
135.031	10931970	Encoder E40HB	Encoder E40HB	
135.032	10999012	V-ring 14x5.5	V-Ring 14x5.5	

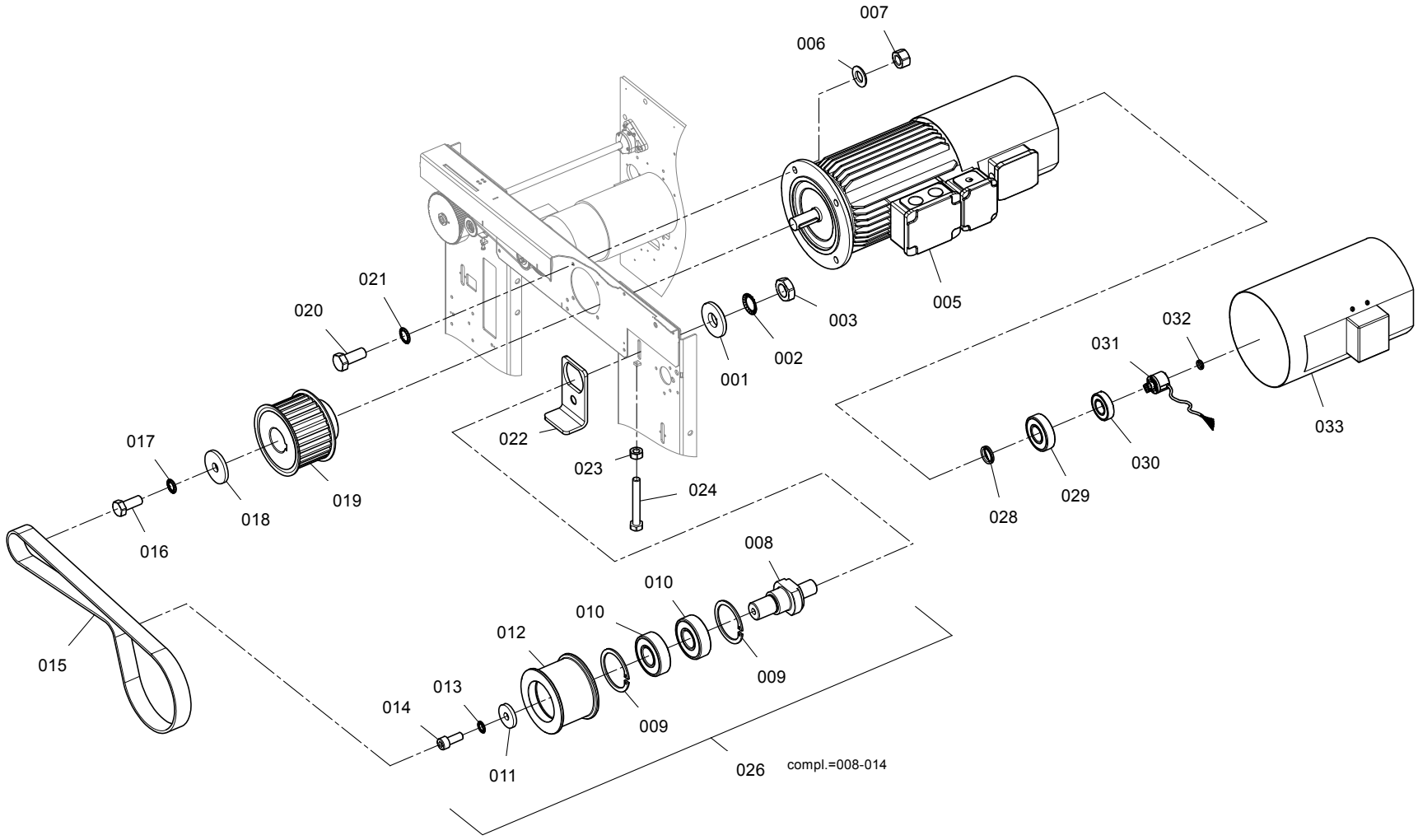
007
006
005
003
002
001
021
020
022
023
024
017
018
019
016
015
008
010
010
012
009
009
013
014
011
026
compl.=008-014
032
031
033
030
029
028

Catalogue no. Katalog-Nr.	Part No. Material-Nr.	Part description en	Material-Bezeichnung de	Comment Bemerkung
135.033	10932515	Additional cooling 0.37kw D	Zus?tzlich K?hlung 0.37kw D	

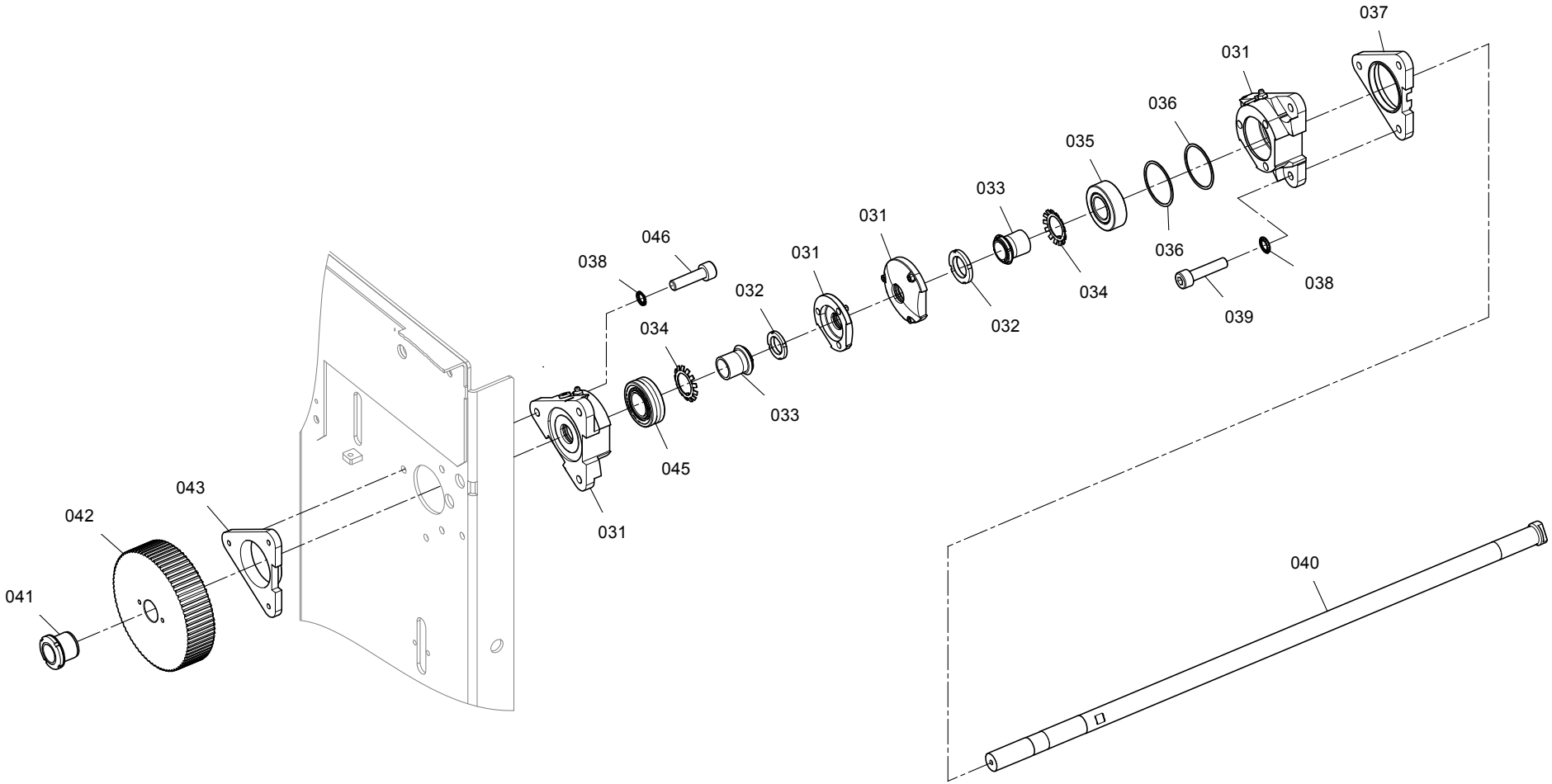

RXX_1_35_201.cgm

Catalogue no. Katalog-Nr.	Part No. Material-Nr.	Part description en	Material-Bezeichnung de	Comment Bemerkung
135.031	10680213	Bearing unit machined FNL 506 BP	Lagereinheit bearbeitet FNL 506 BP	
135.032	10467631	Groove nut M30x1.5-KM6	Nutmutter M30x1.5-KM6	
135.033	10729265	Adapter sleeve 25-H306	Spannh?lse 25-H306	
135.034	10467632	Locking plate 30-MB6	Sicherungsblech 30-MB6	
135.035	10729266	Self-aligning bearing 30/62x20-2206K	Pen.Kugellager 30/62x20-2206K	
135.036	10710598	Ring 1/62	Ring 1/62	
135.037	10686448	Insert	Einsatz	
135.038	10473129	Locking washer 8.2	Sicherungsscheibe 8.2	
135.039	10258951	Cyl.screw M8x35	Zyl.Schraube M8x35	
135.040	10679352	Winding shaft	Spulwelle	
135.041	10418384	Set of tension elements 25/35	Spannsatz 25/35	
135.042	10681470	Cogged belt wheel Z78	Zahnriemenrad Z78	
135.043	10729240	Insert II	Einsatz II	
135.045	10729264	Radial spher. roller bearing 30/62x20-22	Pen.Rollenlager 30/62x20-22206EK	
135.046	10258950	Cyl.screw M8x30	Zyl.Schraube M8x30	

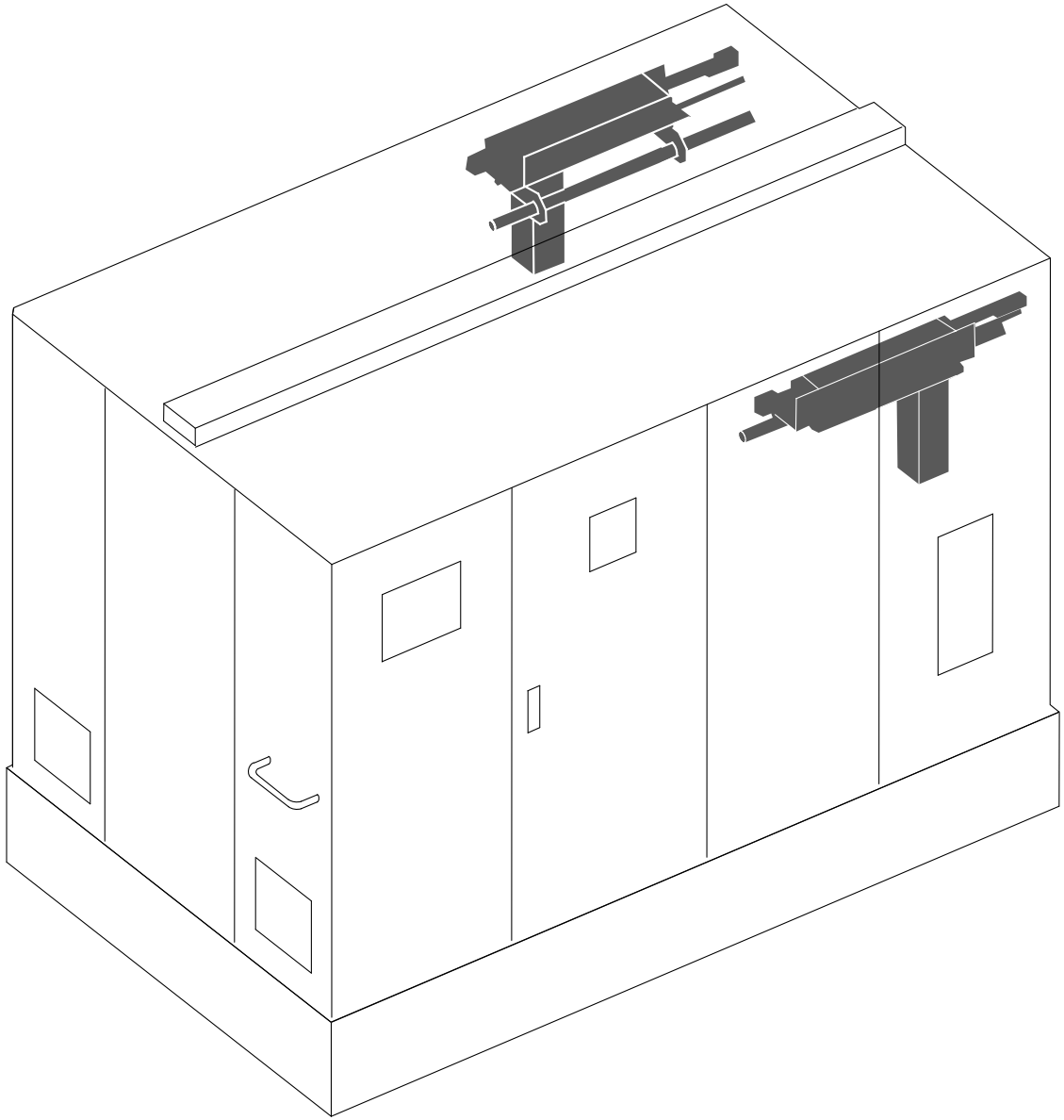

Navi_1_40_01.cgm

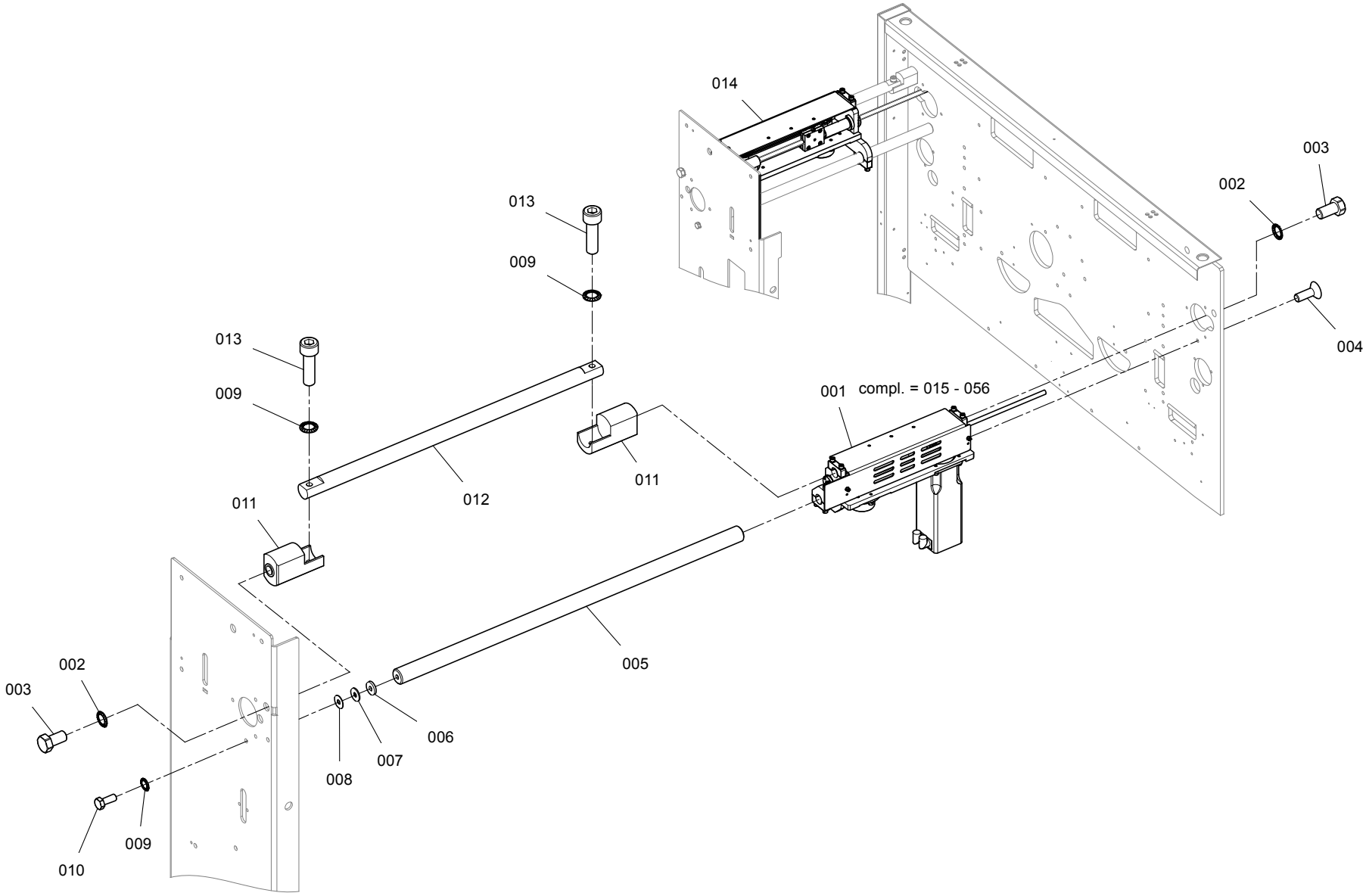
014
003
002
013
009
004
013
009
001
compl. = 015 - 056
012
011
011
005
002
003
006
007
008
009
010

Catalogue no. Katalog-Nr.	Part No. Material-Nr.	Part description en	Material-Bezeichnung de	Comment Bemerkung
140.001	10833239	Traversing HS R	Changierung HS R	
140.002	10483783	Locking washer 17/24	Sicherungsscheibe 17/24	
140.003	10447029	Hex. screw M16x30	6kt-Schraube M16x30	
140.004	10259333	Socket flat head screw M10x30	Senkschraube M10x30	
140.005	10703635	Holding bar	Haltestange	
140.006	10730955	Distance ring 4	Distanzring 4	
140.007	10730917	Distance ring 1	Distanzring 1	
140.008	10530939	Distance ring 0.5	Distanzring 0.5	
140.009	10259423	Locking washer 10.5/16	Sicherungsscheibe 10.5/16	
140.010	10259092	Hex. screw M10x25	6kt-Schraube M10x25	
140.011	10687493	Holder	Halter	
140.012	UE7320454	Rod top	Stange oben	
140.013	10258967	Cyl.screw M10x35	Zyl.Schraube M10x35	
140.014	10823351	Traversing HS L	Changierung HS L	

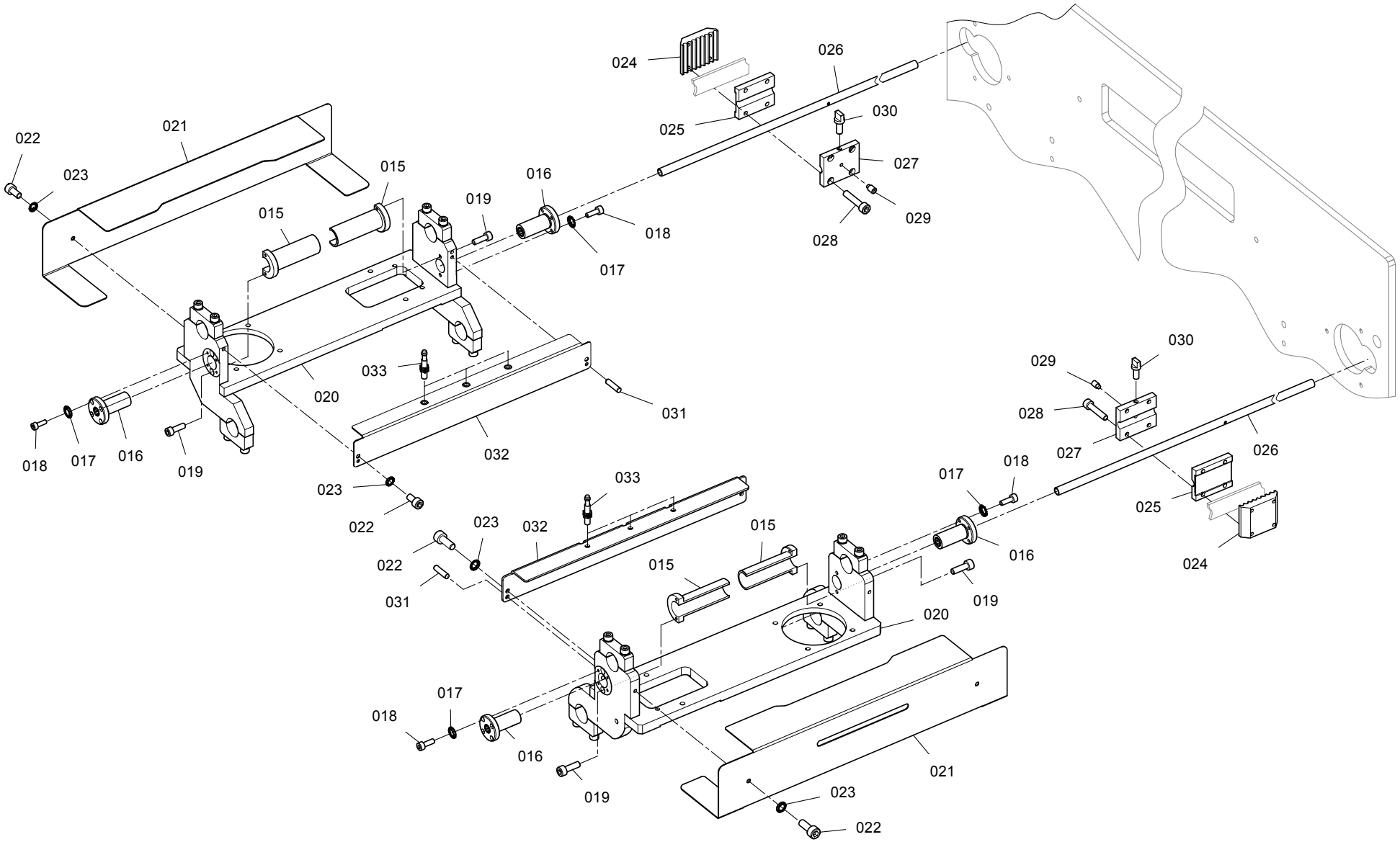
024
026
030
025
027
029
028
022
021
023
015
016
019
018
017
033
020
031
032
018
017
016
019
023
022
033
032
023
022
031
015
015
017
018
016
019
020
021
023
022
029
030
028
027
026
025
024

Catalogue no. Katalog-Nr.	Part No. Material-Nr.	Part description en	Material-Bezeichnung de	Comment Bemerkung
140.015	10752154	Stop piece	Anschlagst?ck	
140.016	10741692	Flanged bush	Flanschbuchse	
140.017	10483109	Locking washer 4.3/7	Sicherungsscheibe 4.3/7	
140.018	10258902	Cyl.screw M4x12	Zyl.Schraube M4x12	
140.019	10258913	Cyl.screw M5x16	Zyl.Schraube M5x16	
140.020	10823377	Chassis complete	Chassis komplett	
140.021	10823615	Covering traversing	Verkleidung Changierung	
140.022	10258924	Cyl.screw M6x12	Zyl.Schraube M6x12	
140.023	10259659	Locking washer 6.4/10	Sicherungsscheibe 6.4/10	
140.024	10628436	Plate I.	Platte I.	
140.025	10628505	Plate II.	Platte II.	
140.026	10628674	Pipe	Rohr	
140.027	10628508	Plate III.	Platte III.	
140.028	10258929	Cyl.screw M6x30	Zyl.Schraube M6x30	
140.029	10259295	Threaded pin M6x10-45H	Gewindestift M6x10-45H	
140.030	10655031	Screw	Schraube	
140.031	10259645	Cylindrical pin 5m6x20	Zylinderstift 5m6x20	
140.032	10996576	Sensor holding complete	F?hleraufnahme komplett	
140.033	10530381	Initiator IME08-1B5PSZT0S DC10-30V	Initiator IME08-1B5PSZT0S DC10-30V	

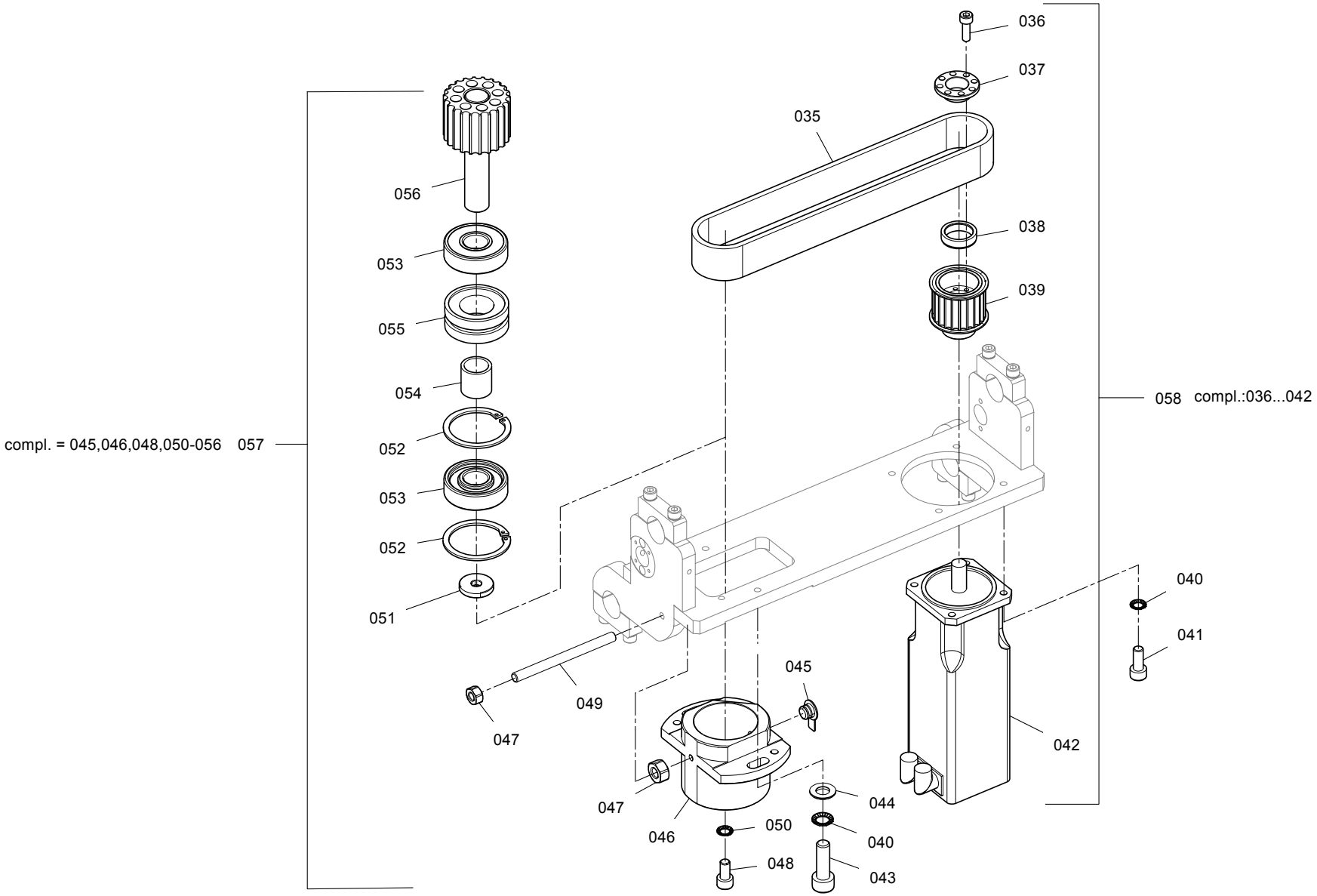

RXX_1_40_302.cgm

Catalogue no. Katalog-Nr.	Part No. Material-Nr.	Part description en	Material-Bezeichnung de	Comment Bemerkung
140.035	10628668	Toothed belt PGGT3 720-8MGT-36	Zahnriemen PGGT3 720-8MGT-36	
140.036	10258913	Cyl.screw M5x16	Zyl.Schraube M5x16	
140.037	10663960	Ring	Ring	
140.038	10706710	Tension element 19/24x6.3	Spannelement 19/24x6.3	
140.039	10776460	Cogged belt wheel complete Z22	Zahnriemenrad komplett Z22	
140.040	10259660	Locking washer 8.4/13	Sicherungsscheibe 8.4/13	
140.041	10258948	Cyl.screw M8x20	Zyl.Schraube M8x20	
140.042	10663923	Motor EMM508T-0-1	Motor EMM508T-0-1	
140.043	10258949	Cyl.screw M8x25	Zyl.Schraube M8x25	
140.044	10259629	Washer 8.4-St-140HV	Scheibe 8.4-St-140HV	
140.045	10998424	Blind plug SR 1067 110280	Blindstopfen SR 1067 110280	
140.046	10628525	Bearing body	Lagerk?rper	
140.047	10431759	Hexagon nut M6-8	6kt-Mutter M6-8	
140.048	10258947	Cyl.screw M8x16	Zyl.Schraube M8x16	
140.049	10629569	Screw	Schraube	
140.050	10461551	Locking washer 8.4/13	Sicherungsscheibe 8.4/13	
140.051	10997664	Distance disk	Distanzscheibe	
140.052	10355084	Locking ring 52x2	Sicherungsring 52x2	
140.053	10506881	Deep-groove ball bearing 20/52x15-6304-2	Ri.Kugellager 20/52x15-6304-2Z	
140.054	UE3123115	Spacer	Abstandhalter	
140.055	UE3123116	Insert	Einlage	
140.056	11000111	Shaft complete Z22	Welle komplett Z22	
140.057	11000061	Tension roller	Spannrolle	
140.058	10776458	Motor complete	Motor komplett	

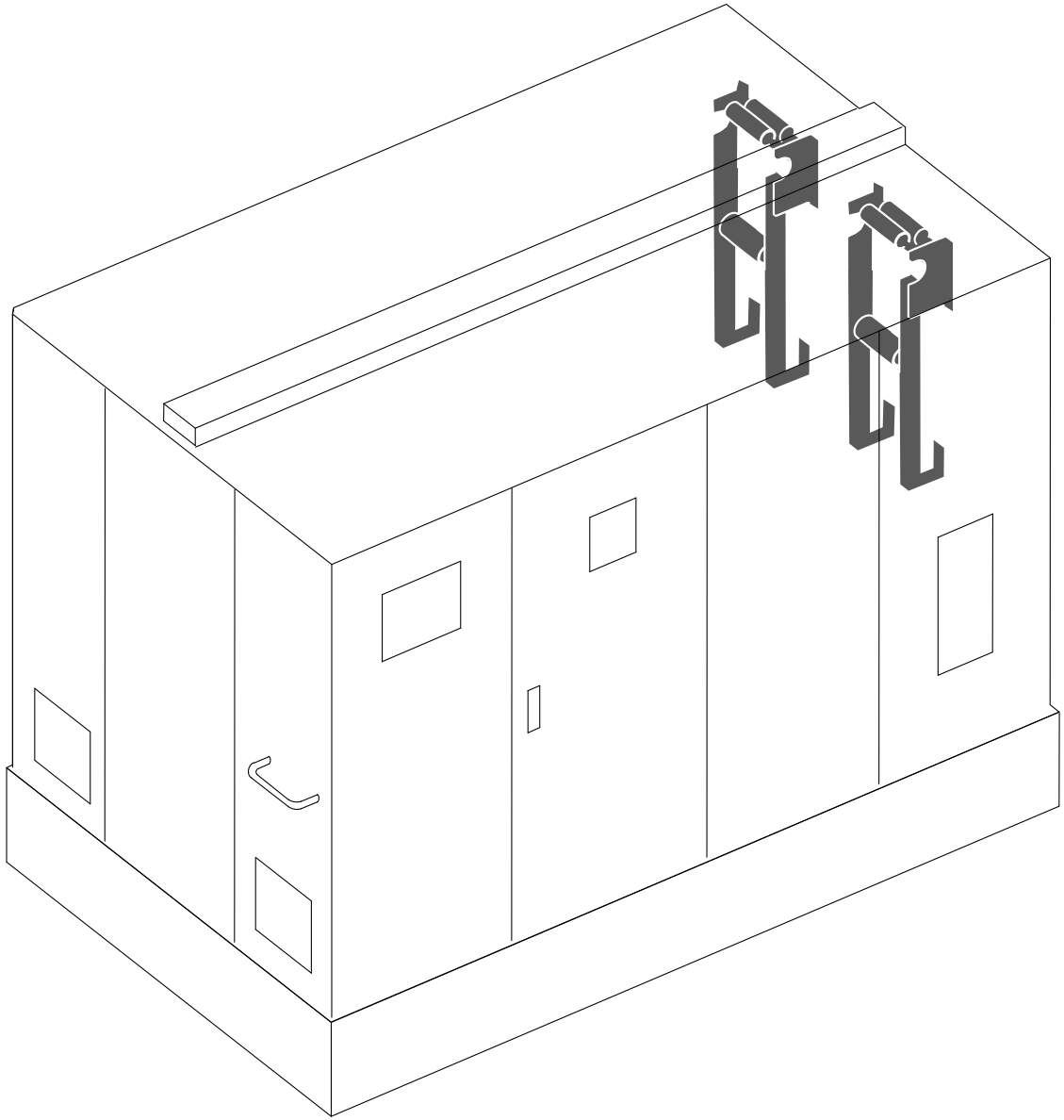

Navi_1_60_01.cgm

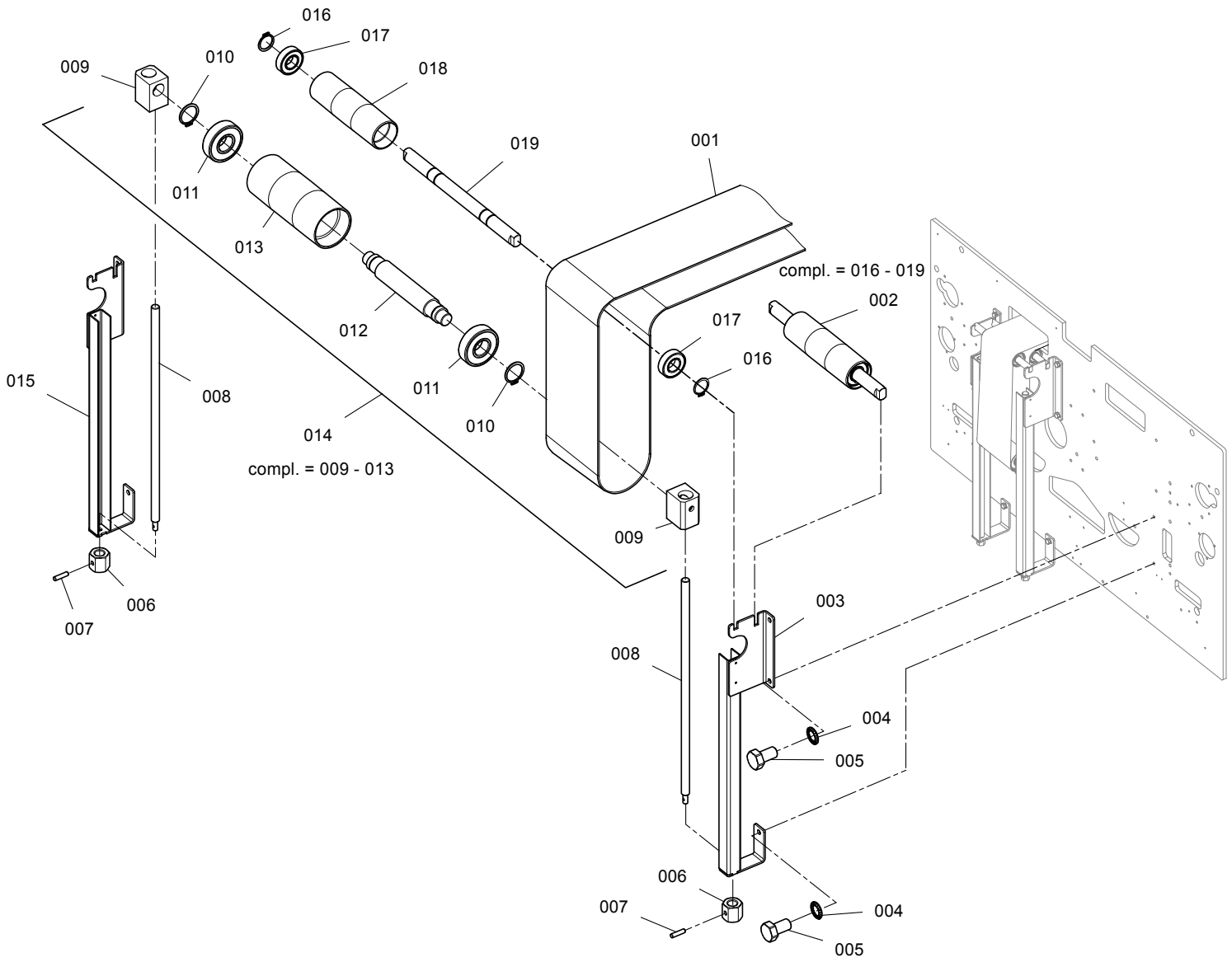
016
017
009
010
018
019
001
011
013
012
compl. = 016 - 019
002
017
016
015
008
011
010
014
compl. = 009 - 013
009
006
007
003
008
004
005
006
007
004
005

Catalogue no. Katalog-Nr.	Part No. Material-Nr.	Part description en	Material-Bezeichnung de	Comment Bemerkung
160.001	10984639	Conveyor E-15EN ME 150x109800 0/-120	F?rderanlage E-15EN ME 150x109800 0/-120	
160.002	10665468	Deflection cylinder	Umlenkwalze	
160.003	10754139	Guiding profile welded R	F?hrungsprofil geschweisst R	
160.004	10259423	Locking washer 10.5/16	Sicherungsscheibe 10.5/16	
160.005	10259672	Hex. screw M10x18	6kt-Schraube M10x18	
160.006	UA4120566	Nut	Mutter	
160.007	10259645	Cylindrical pin 5m6x20	Zylinderstift 5m6x20	
160.008	10754181	Screw	Schraube	
160.009	UE7120904	Cube	W?rfel	
160.010	10259649	Locking ring 25x1.2	Sicherungsring 25x1.2	
160.011	10471943	Deep-groove ball bearing 25/62x17-6305-2	Ri.Kugellager 25/62x17-6305-2Z	
160.012	UE3020902	Shaft	Welle	
160.013	UE3020903	Roller	Walze	
160.014	UE3020901	Roller	Walze	
160.015	10754354	Guiding profile welded L	F?hrungsprofil geschweisst L	
160.016	10259684	Locking ring 20x1.2	Sicherungsring 20x1.2	
160.017	10370345	Deep-groove ball bearing 20/42x12-6004-2	Ri.Kugellager 20/42x12-6004-2Z	
160.018	UE3065503	Roller	Walze	
160.019	10665524	Shaft	Welle	

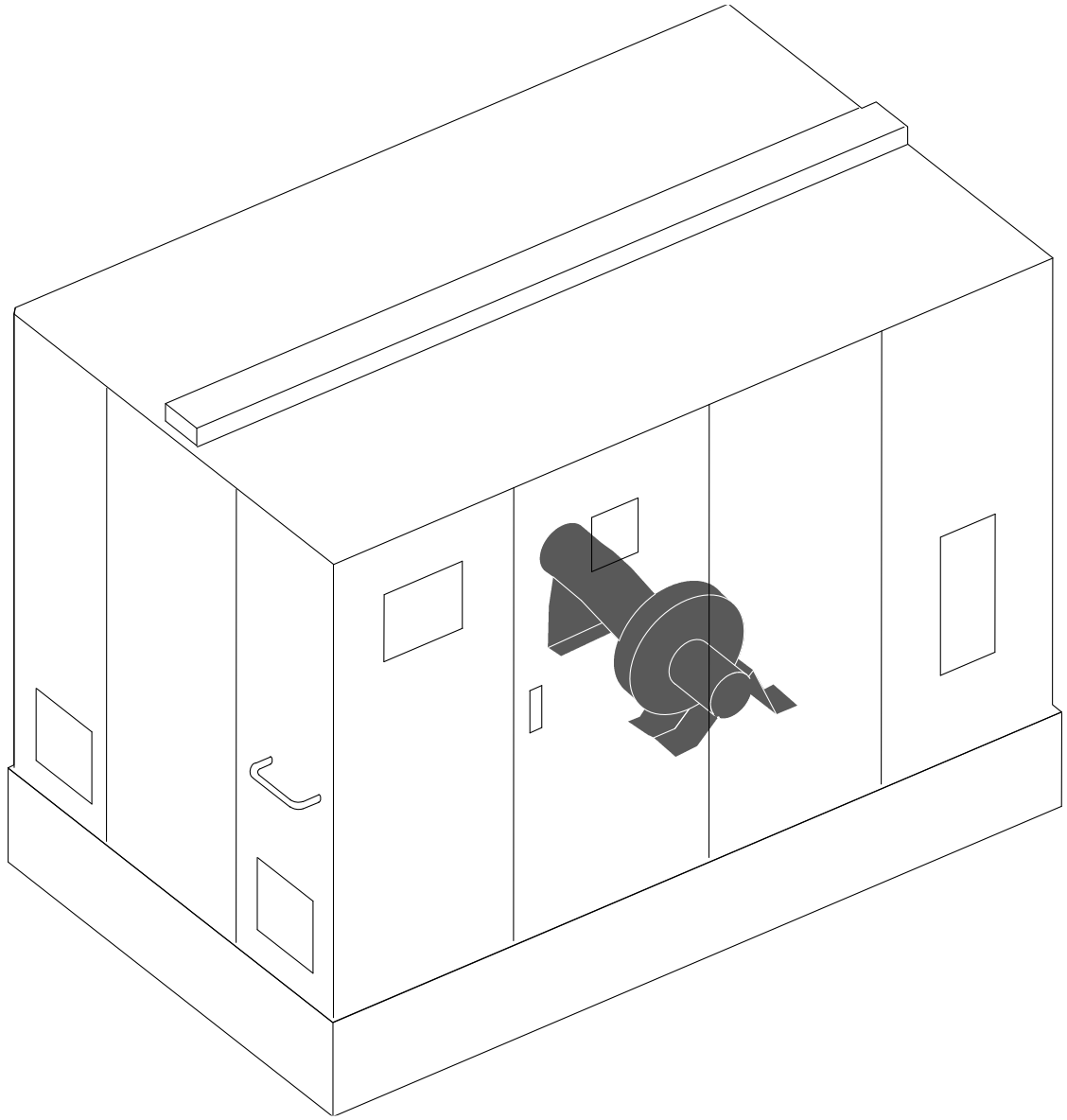

Navi_1_95_01.cgm

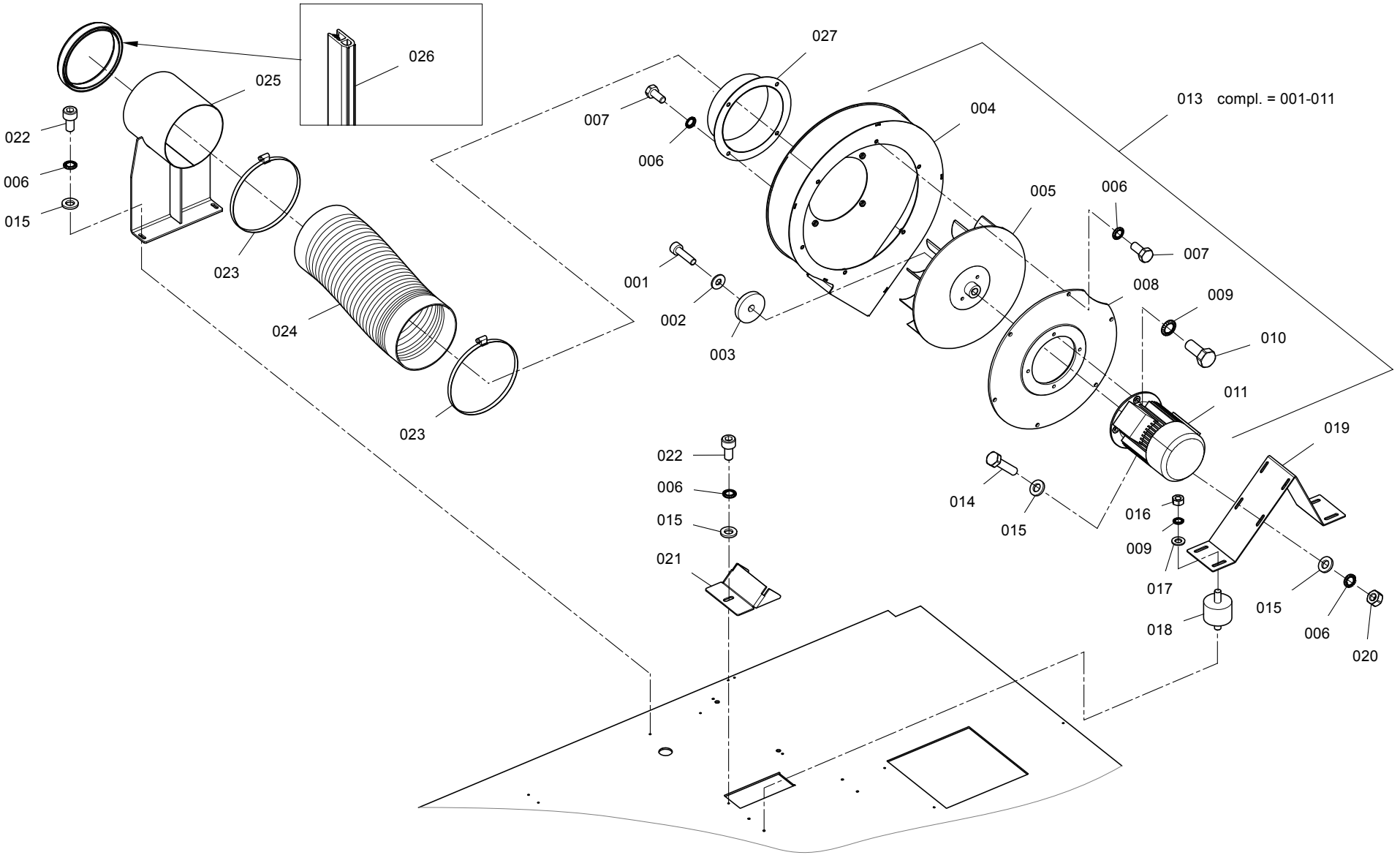

RXX_1_95_101.cgm

Catalogue no. Katalog-Nr.	Part No. Material-Nr.	Part description en	Material-Bezeichnung de	Comment Bemerkung
195.001	10244210	Cyl.screw M5x20	Zyl.Schraube M5x20	
195.002	10473200	Locking washer 5.1	Sicherungsscheibe 5.1	
195.003	10667639	Washer	Scheibe	
195.004	10725929	Fan housing welded	Ventilatorgeh?use geschweisst	
195.005	10667347	Fan wheel	Ventilatorrad	
195.006	10258859	Locking washer 6.4/10	Sicherungsscheibe 6.4/10	
195.007	10259603	Hex. screw M6x14	6kt-Schraube M6x14	
195.008	10667351	Connecting cover	Anschlussdeckel	
195.009	10461551	Locking washer 8.4/13	Sicherungsscheibe 8.4/13	
195.010	10490989	Hex. screw M8x20	6kt-Schraube M8x20	
195.011	10823784	Motor B35T 0.55KW IE1	Motor B35T 0.55KW IE1	
195.013	10725928	Cooling fan 0,55 kW	K?hlventilator 0,55 kW	
195.014	10259082	Hex. screw M6x25	6kt-Schraube M6x25	
195.015	10456142	Washer 6.4-St-200HV	Scheibe 6.4-St-200HV	
195.016	10259607	Hexagon nut M8-8	6kt-Mutter M8-8	
195.017	10478061	Washer 8.4-St-200HV	Scheibe 8.4-St-200HV	
195.018	U82770116	Leg spring 116.12	Schenkelfeder 116.12	
195.019	10724061	Sheet	Blech	
195.020	10431759	Hexagon nut M6-8	6kt-Mutter M6-8	
195.021	10725611	Splice	Lasche	
195.022	10258924	Cyl.screw M6x12	Zyl.Schraube M6x12	
195.023	10591341	Tube clip A-150-170-W1-2	Schlauchklemme A-150-170-W1-2	
195.024	10731091	Hose PU 150	Schlauch PU 150	
195.025	10702683	Suction port welded	Ansaugstutzen geschweisst	
195.026	1094257	Profile 21x9.8-EPDM	Profil 21x9.8-EPDM	
195.027	10727873	Connection piece IN R35	Stutzen IN R35	

RIETER

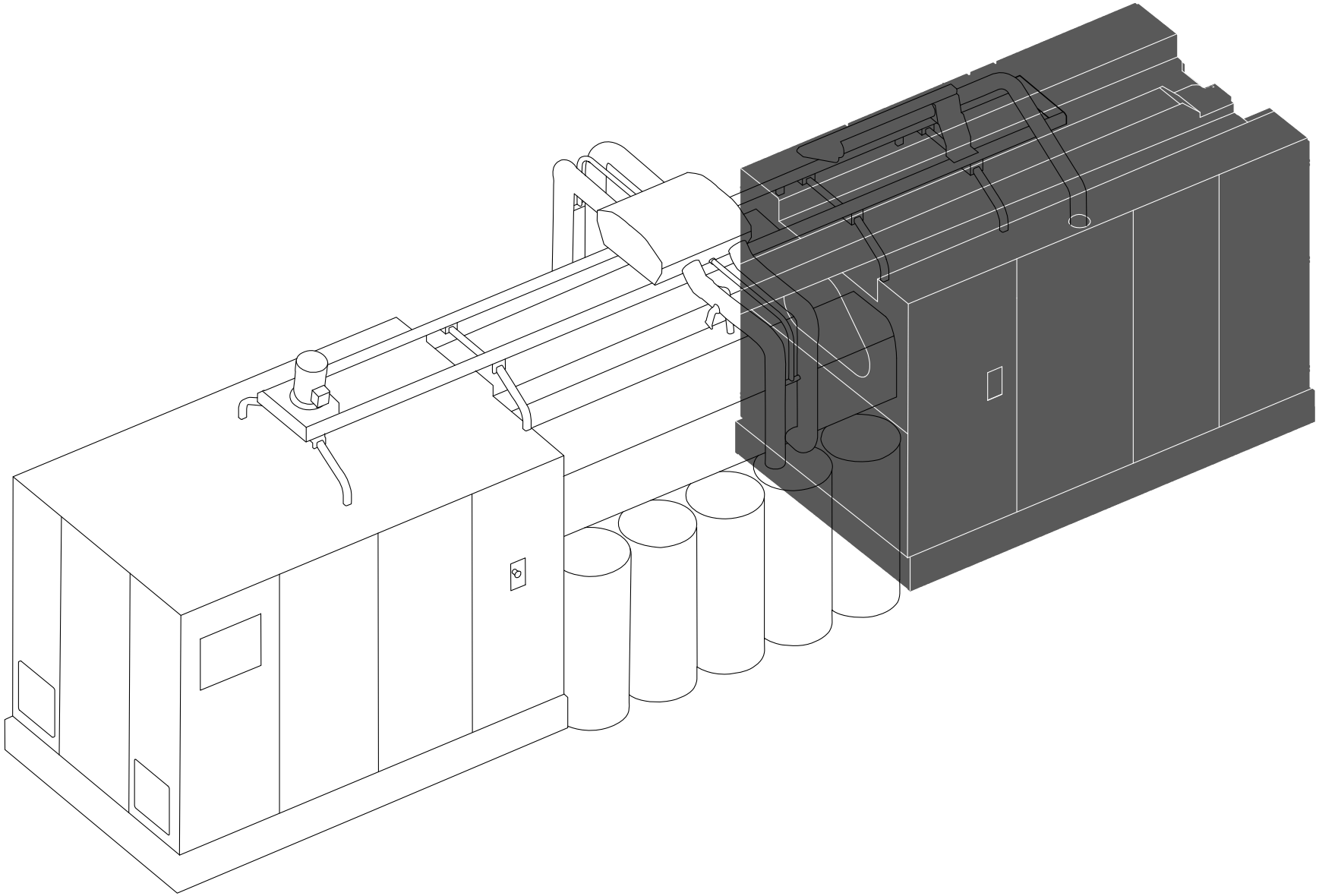

Navi_2_01.cgm

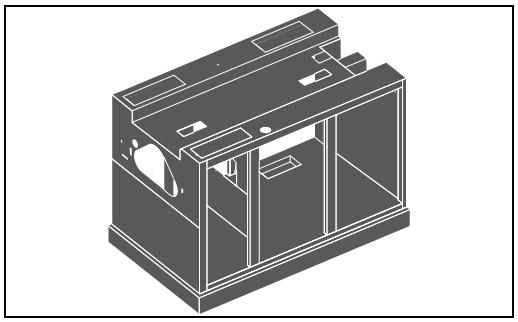

205

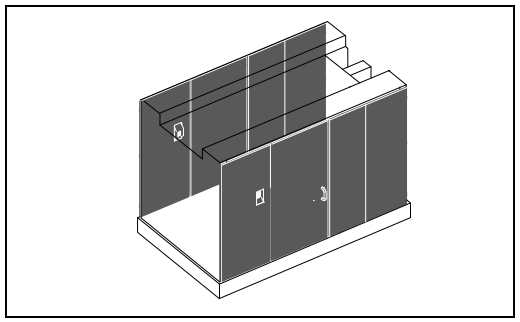

210

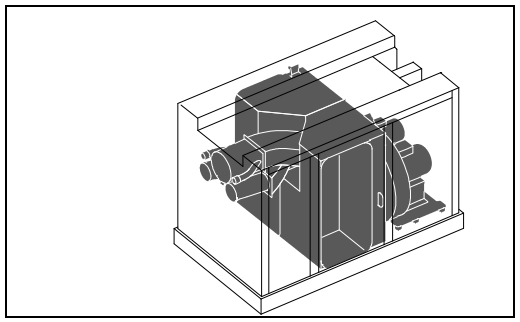

215

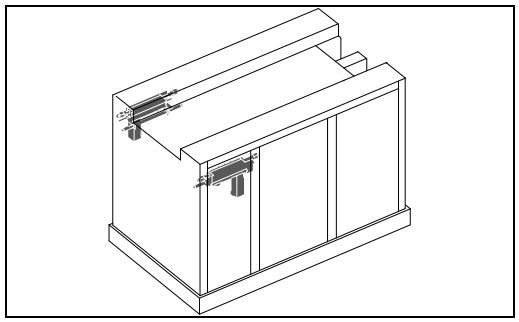

220

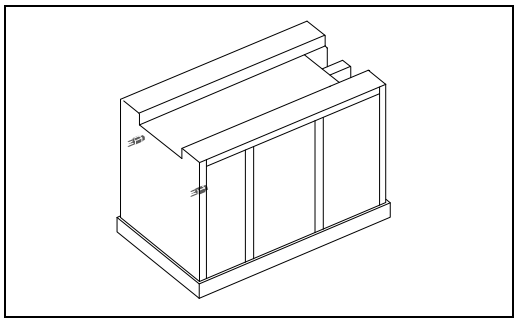

225

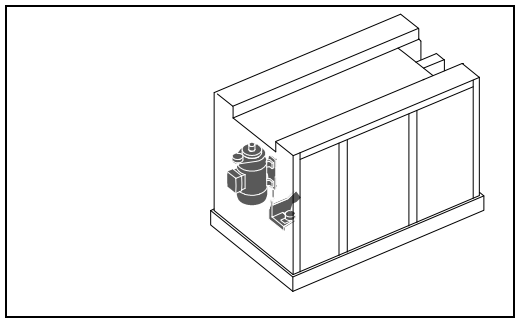

235

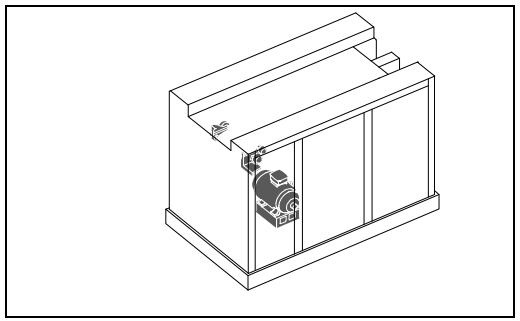

237

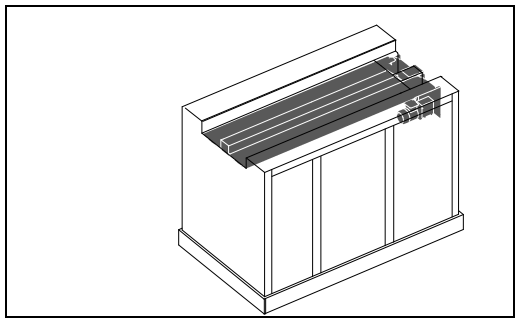

245

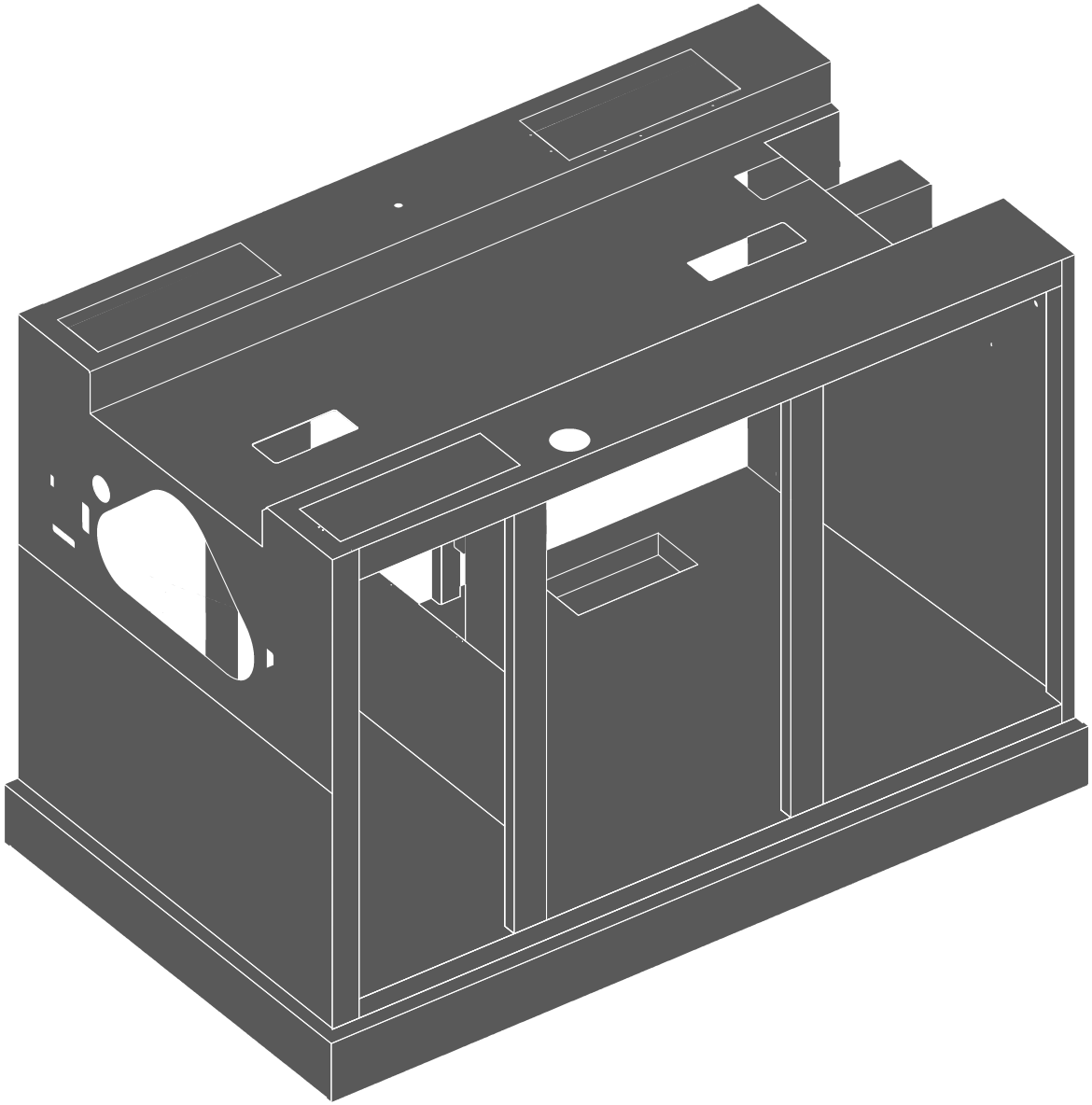

R 36

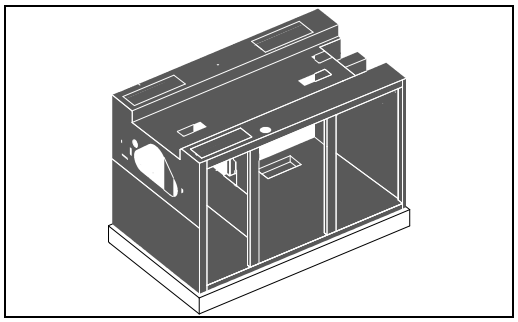

20510

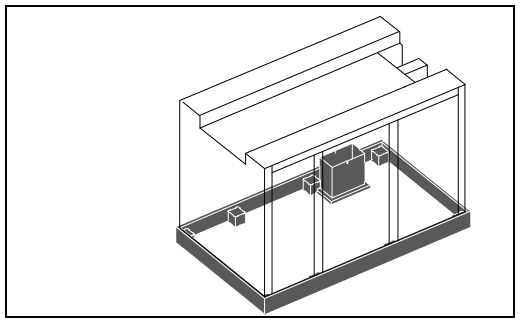

20520

R 36

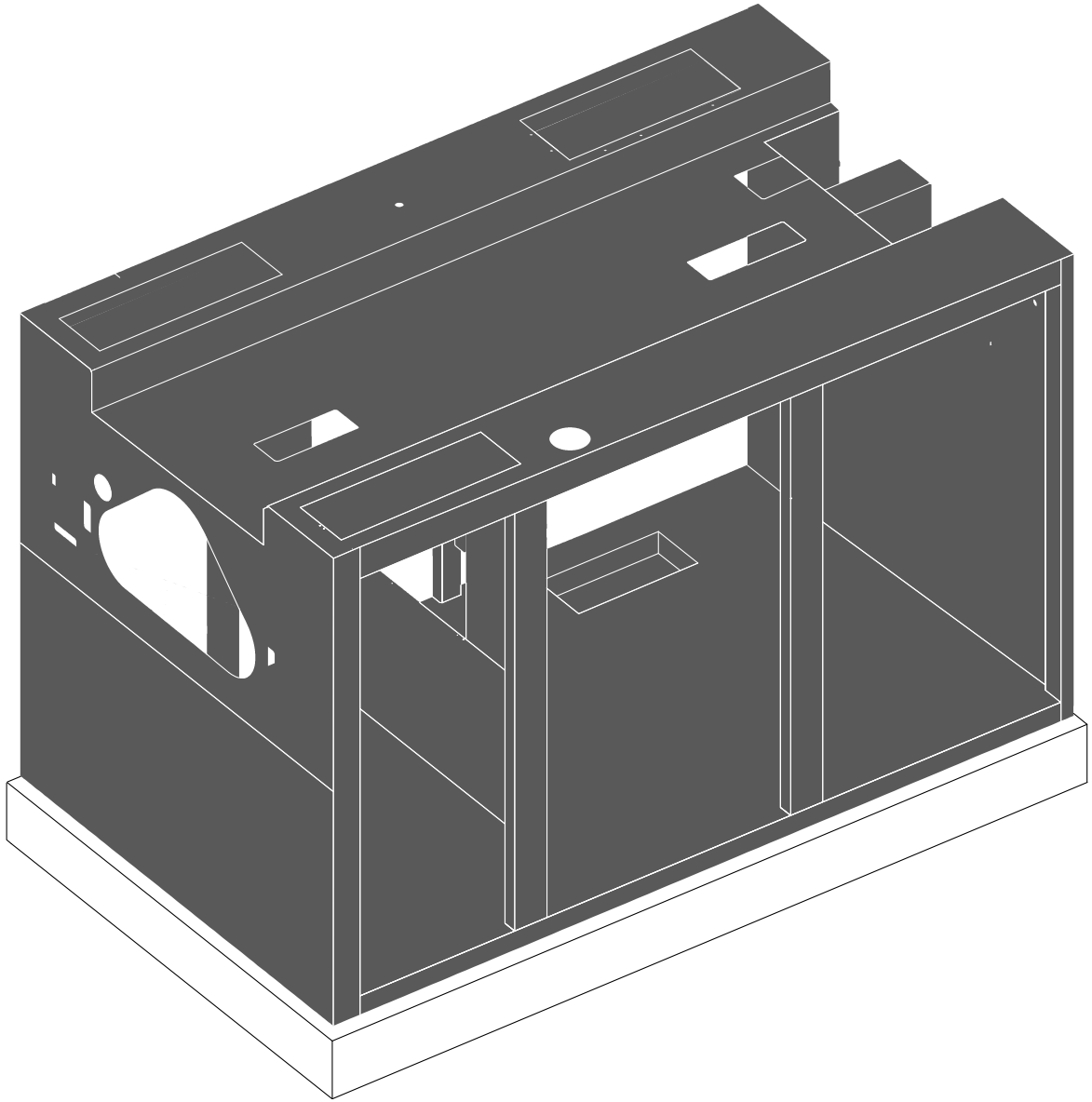

20510

Navi_2_05_10_01.cgm

R 36

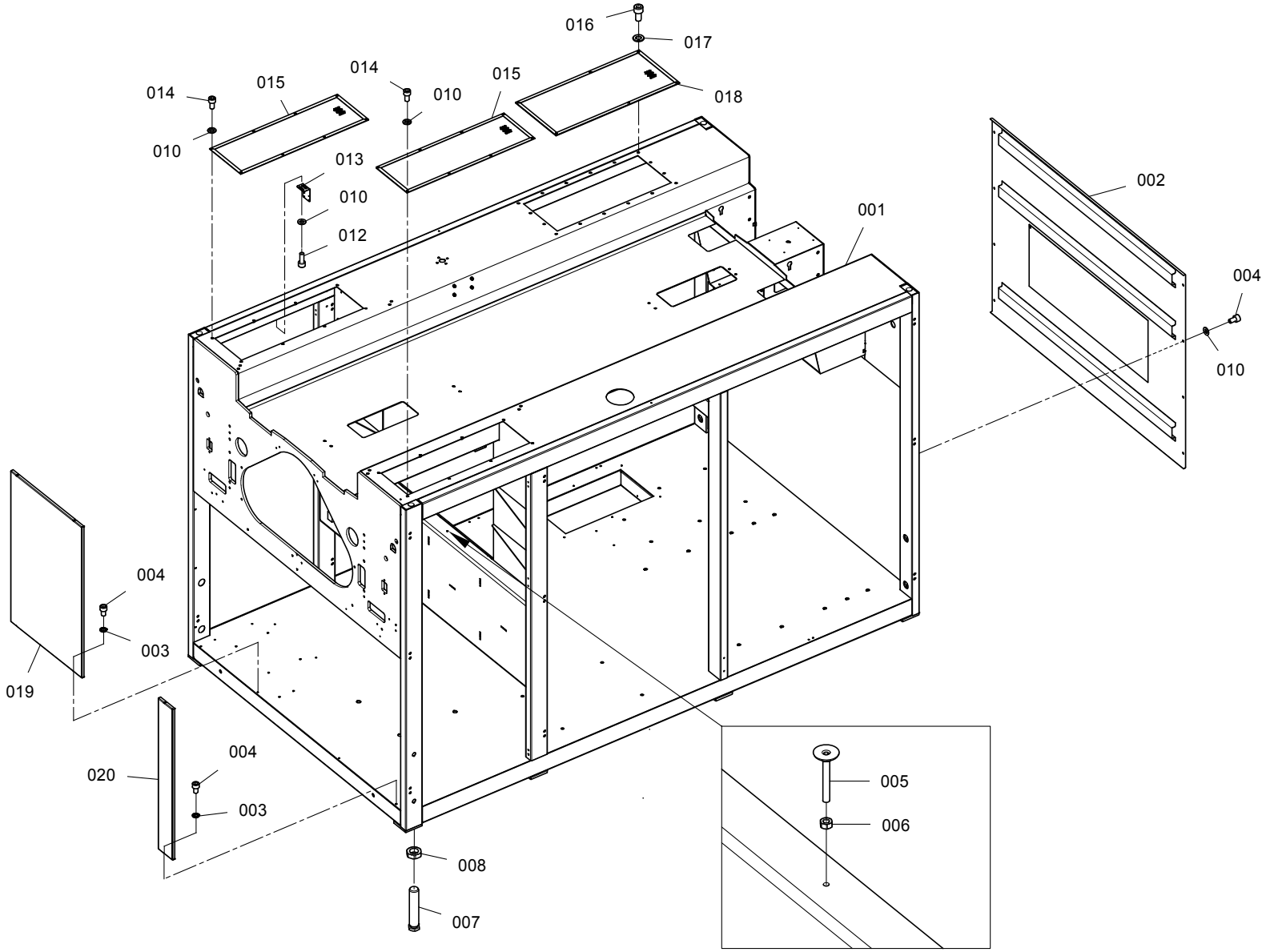

20510

RXX_2_05_10_B101.cgm

Catalogue no. Katalog-Nr.	Part No. Material-Nr.	Part description en	Material-Bezeichnung de	Comment Bemerkung
20510.001	10953419	Frame welded ES R36	Rahmen geschweisst ES R36	
20510.002	10922866	Cover fan	Abdeckung Ventilator	
20510.003	10003108	Locking washer 6.4/10	Sicherungsscheibe 6.4/10	
20510.004	10258830	Cyl.screw M6x10	Zyl.Schraube M6x10	
20510.005	10714878	Support	Support	
20510.006	10259607	Hexagon nut M8-8	6kt-Mutter M8-8	
20510.007	UA3811051	Screw	Schraube	
20510.008	10568237	Hexagon nut M20x1.5-06	6kt-Mutter M20x1.5-06	
20510.010	10354210	Washer 6.4-St-140HV	Scheibe 6.4-St-140HV	
20510.013	10693106	Switch carrier	Schaltertr?ger	
20510.014	10258924	Cyl.screw M6x12	Zyl.Schraube M6x12	
20510.015	10714447	Ventilation hood	Bel?ftungshaube	
20510.016	10258947	Cyl.screw M8x16	Zyl.Schraube M8x16	
20510.017	10259629	Washer 8.4-St-140HV	Scheibe 8.4-St-140HV	
20510.018	10762576	Ventilation hood 2	Bel?ftungshaube 2	
20510.019	10961740	Cover welded L	Abdeckung geschweisst L	
20510.020	10946906	Cover R	Abdeckung R	

R 36

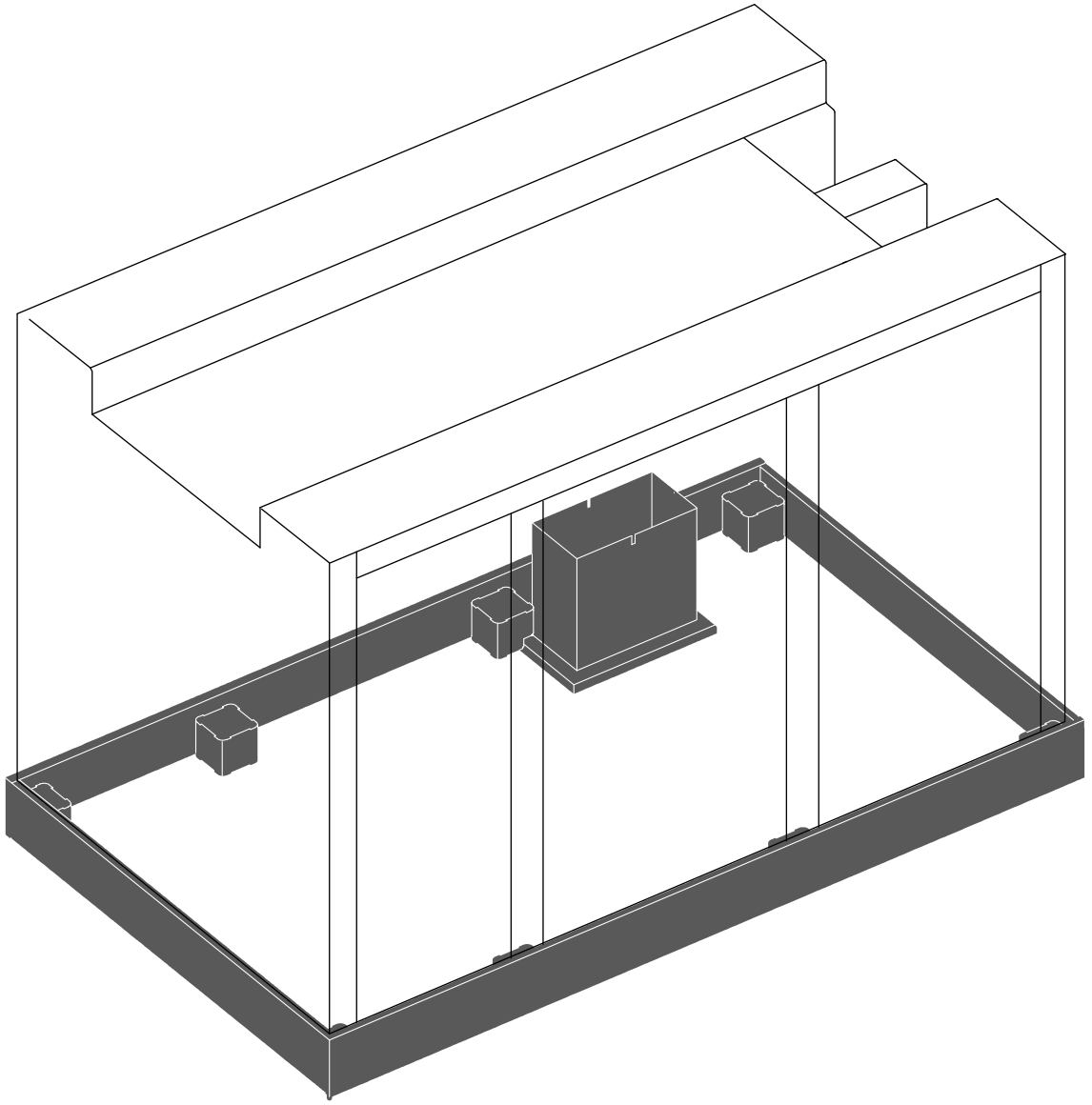

20520

Navi_2_05_20_01.cgm

R 36

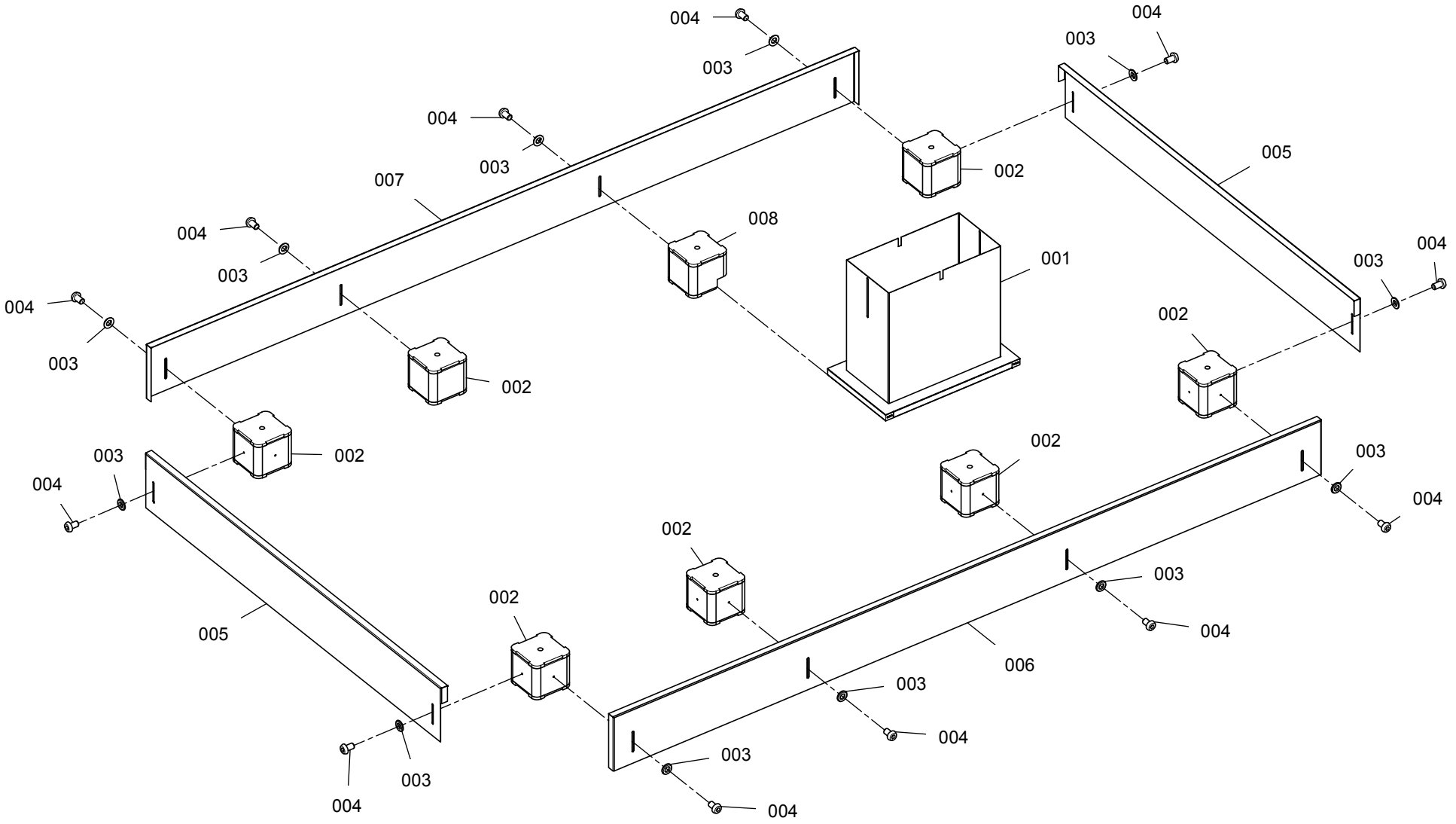

20520

RXX_2_05_20_A101.cgm

58361

Catalogue no. Katalog-Nr.	Part No. Material-Nr.	Part description en	Material-Bezeichnung de	Comment Bemerkung
20520.001	10953524	Channel 1070	Kanal 1070	
20520.002	10704486	Support for frame	Maschinenst?tze	
20520.003	10354210	Washer 6.4-St-140HV	Scheibe 6.4-St-140HV	
20520.004	10504711	Oval head screw M6x10	Linsenschraube M6x10	
20520.005	10921508	Covering	Verkleidung	
20520.006	10936522	Covering left	Verkleidung links	
20520.007	10936521	Covering right	Verkleidung rechts	
20520.008	10979196	Support for frame 1070	Maschinenst?tze 1070	

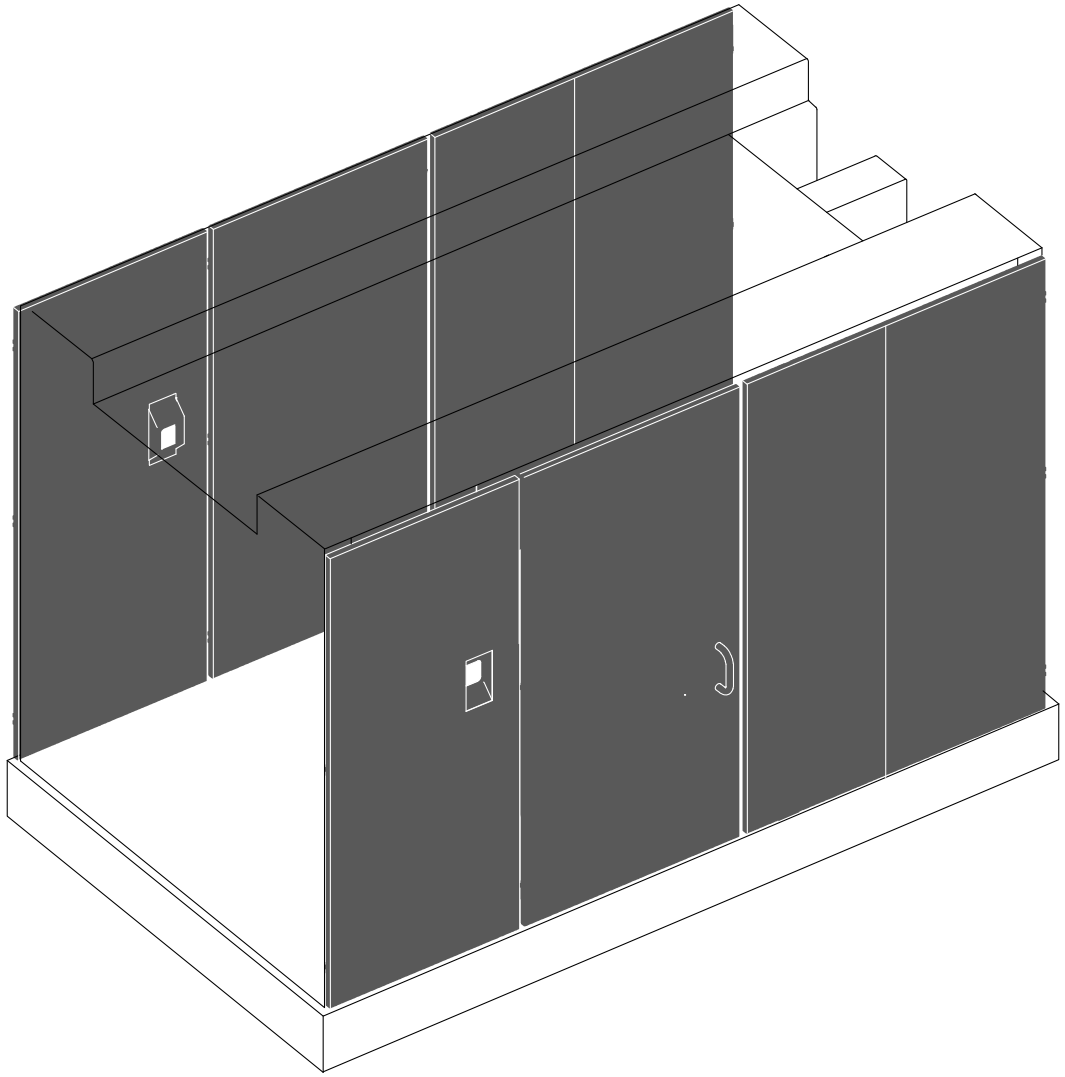

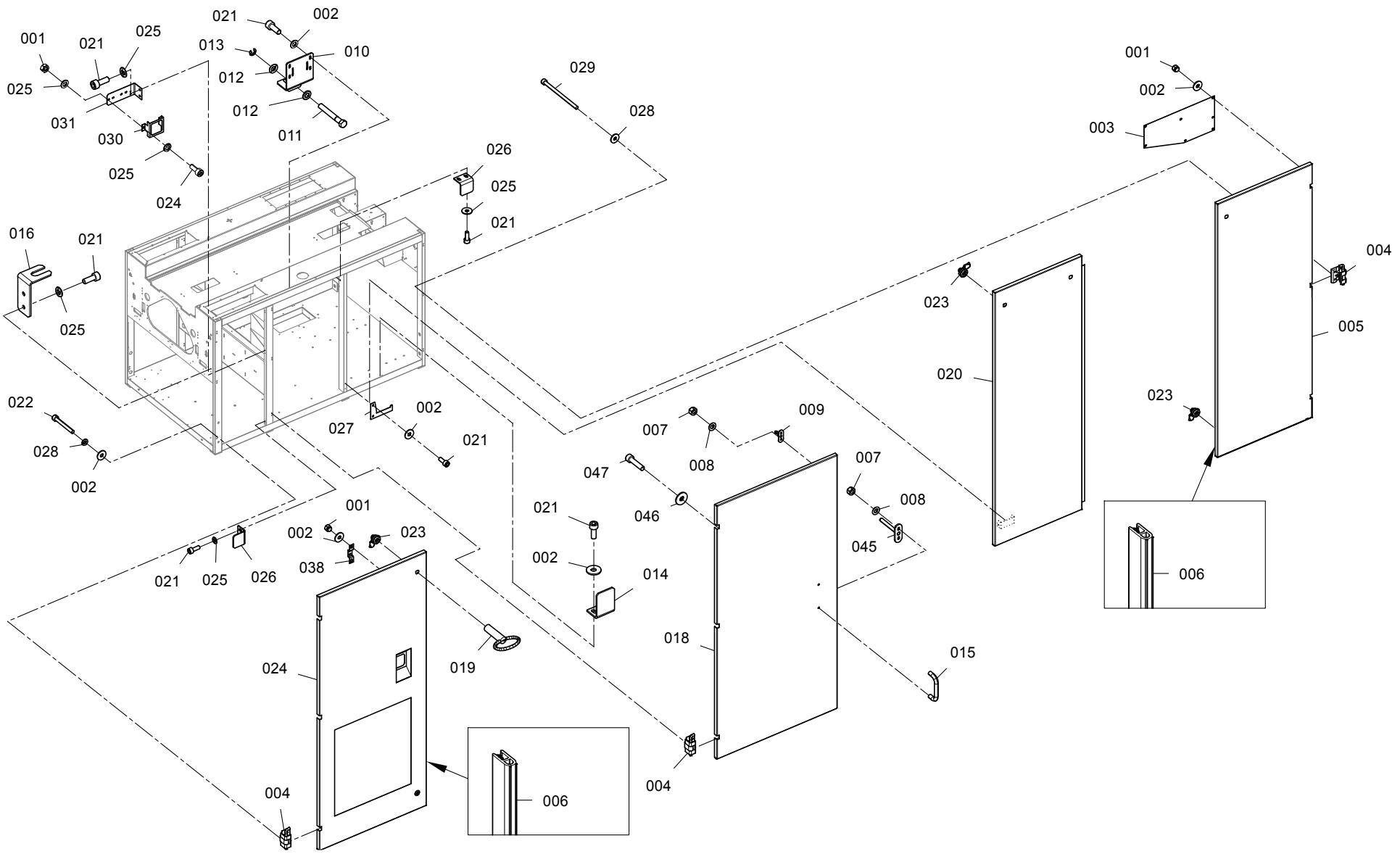

RXX_2_10_B101.cgm

Catalogue no. Katalog-Nr.	Part No. Material-Nr.	Part description en	Material-Bezeichnung de	Comment Bemerkung
210.001	10431759	Hexagon nut M6-8	6kt-Mutter M6-8	
210.002	10258855	Washer 6.4-St-100HV	Scheibe 6.4-St-100HV	
210.003	10692528	Underlying plate	Unterlegplatte	
210.004	10002651	Hinge light green 2	Scharnier hellgr?n 2	
210.005	10934990	Door rear R	T?r hinten R	
210.006	10615460	Profile 20x11-EPDM	Profil 20x11-EPDM	
210.007	10259463	Hexagon nut M5-8	6kt-Mutter M5-8	
210.008	10245275	Washer 5.3-St-140HV	Scheibe 5.3-St-140HV	
210.009	10961462	Spring rod	Feder Stange	
210.010	10951535	Holder welded	Halter geschweisst	
210.011	10960651	Tension screw M12x90 ISO 4014	Spannschraube M12x90 ISO 4014	
210.012	10455614	Washer 13-St-200HV	Scheibe 13-St-200HV	
210.013	10489837	Locking washer 9	Sicherungsscheibe 9	
210.014	10935462	Angle	Winkel	
210.015	10002705	Bow handle red 150	B?gelgriff rot 150	
210.016	10977546	Suspension support	H?ngehalter	
210.018	10961460	Door filter box R	T?r Filterkasten R	
210.019	10624743	Key 8	Schl?ssel 8	
210.020	10935249	Cover R	Abdeckung R	
210.021	10258828	Cyl.screw M6x16	Zyl.Schraube M6x16	
210.022	10258934	Cyl.screw M6x50	Zyl.Schraube M6x50	
210.023	10691713	Lock	Schloss	
210.024	10933361	Door front R	T?r Front R	
210.025	10354210	Washer 6.4-St-140HV	Scheibe 6.4-St-140HV	
210.026	10693423	Angle piece	Winkelst?ck	
210.027	10753255	Holder KRYCI	Halter KRYCI	
210.028	10338176	Spring ring 6	Federring 6	
210.029	10258943	Cyl.screw M6x100	Zyl.Schraube M6x100	
210.030	10413730	Frame	Rahmen	

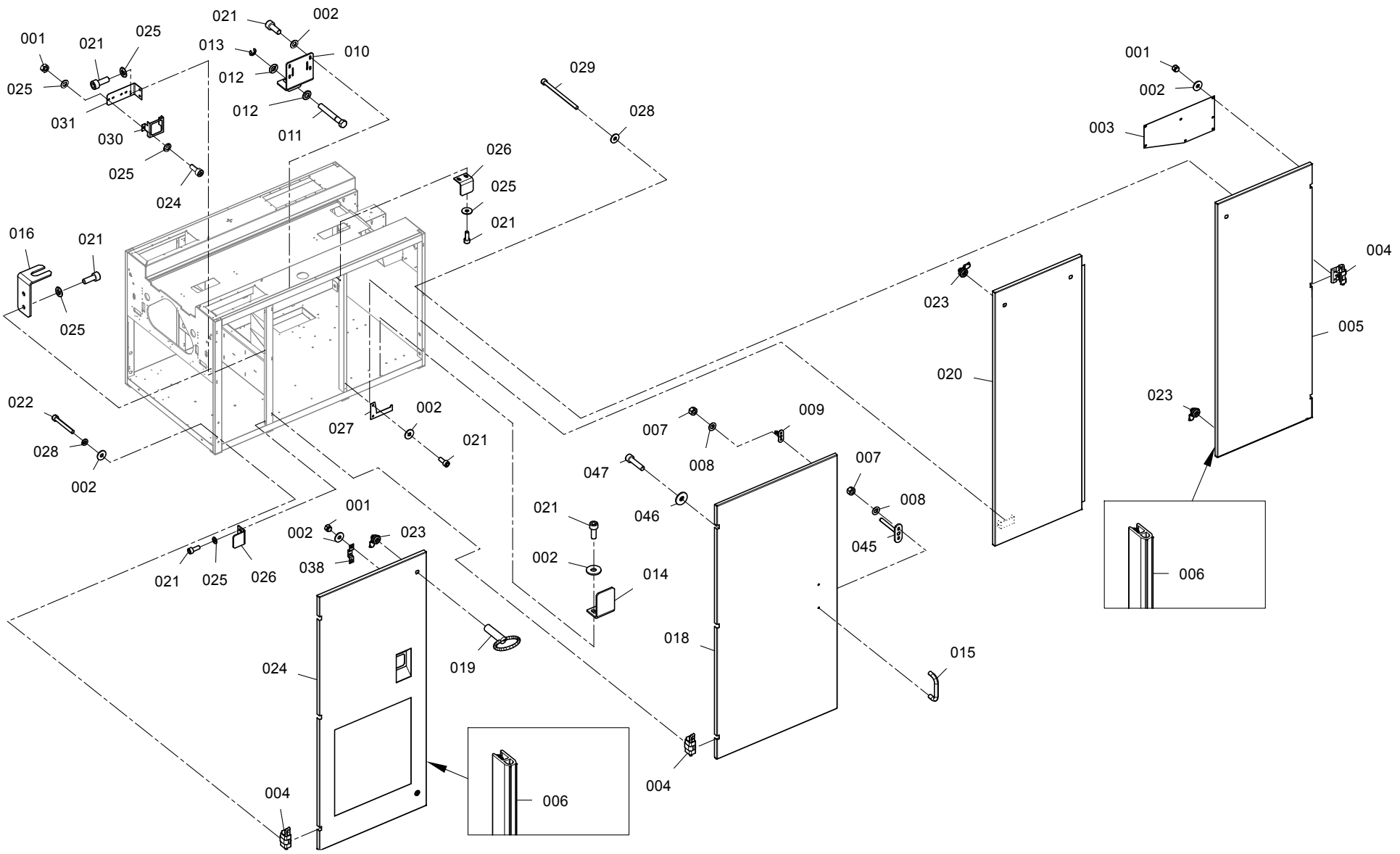

RXX_2_10_B101.cgm

Catalogue no. Katalog-Nr.	Part No. Material-Nr.	Part description en	Material-Bezeichnung de	Comment Bemerkung
210.031	10692669	Emergency shut-down button angle	Not-Aus-Taster Winkel	
210.038	10382306	Holder	Halter	
210.045	10961533	Locking bolt 3	Sperrbolzen 3	
210.046	10356696	Washer 8.4-St-100HV	Scheibe 8.4-St-100HV	
210.047	10258951	Cyl.screw M8x35	Zyl.Schraube M8x35	

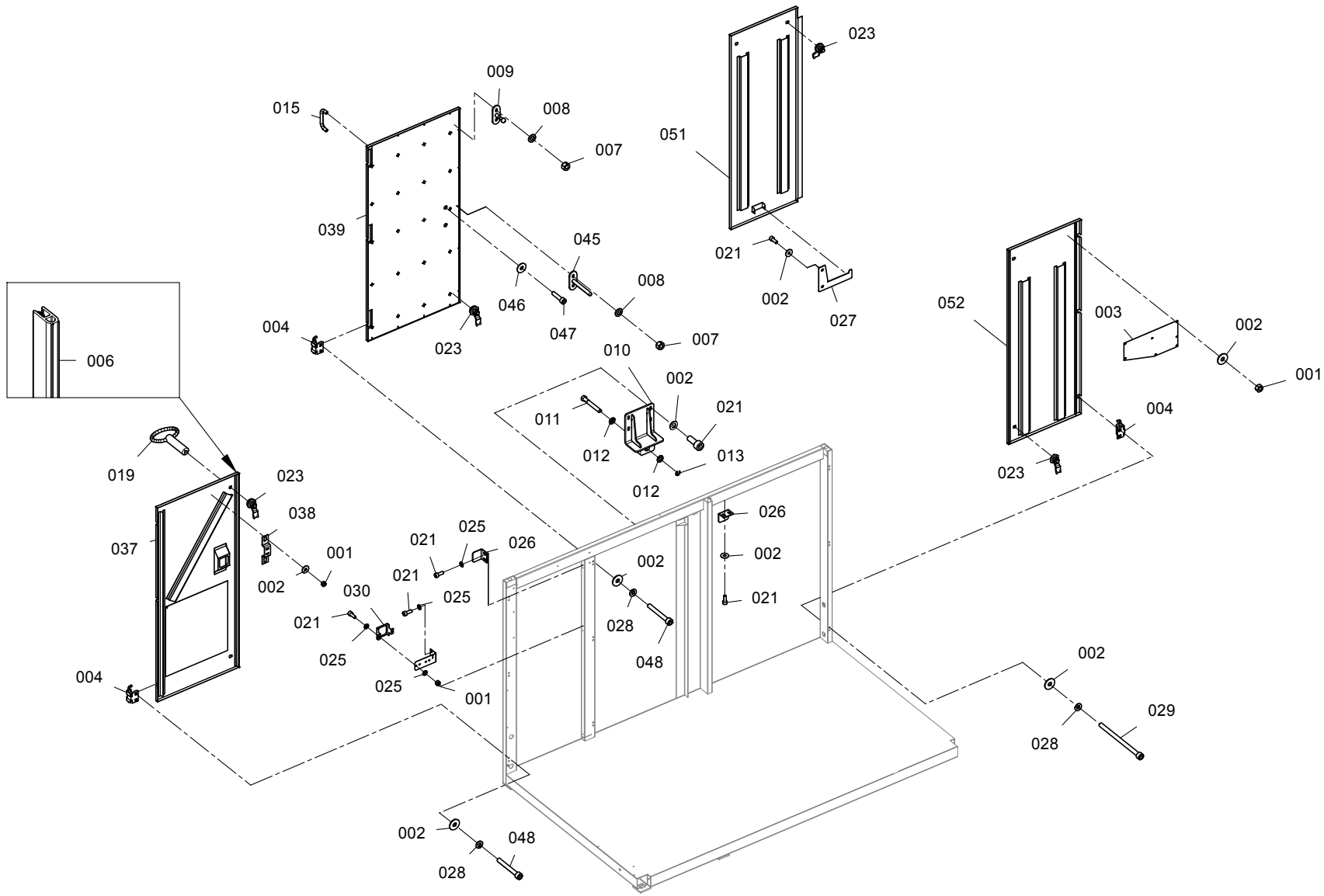
023
009
008
007
015
051
039
045
008
007
046
047
004
023
021
002
027
006
010
002
021
011
012
013
012
052
003
002
001
004
023
019
023
038
037
001
002
021
025
026
021
025
030
021
025
025
001
004
002
026
002
021
002
028
048
002
029
028
002
048
028

Catalogue no. Katalog-Nr.	Part No. Material-Nr.	Part description en	Material-Bezeichnung de	Comment Bemerkung
210.001	10431759	Hexagon nut M6-8	6kt-Mutter M6-8	
210.002	10258855	Washer 6.4-St-100HV	Scheibe 6.4-St-100HV	
210.003	10692528	Underlying plate	Unterlegplatte	
210.004	10002651	Hinge light green 2	Scharnier hellgr?n 2	
210.006	10615460	Profile 20x11-EPDM	Profil 20x11-EPDM	
210.007	10259463	Hexagon nut M5-8	6kt-Mutter M5-8	
210.008	10245275	Washer 5.3-St-140HV	Scheibe 5.3-St-140HV	
210.009	10847755	Spring rod 2	Feder Stange 2	
210.010	10951535	Holder welded	Halter geschweisst	
210.011	10960651	Tension screw M12x90 ISO 4014	Spannschraube M12x90 ISO 4014	
210.012	10455614	Washer 13-St-200HV	Scheibe 13-St-200HV	
210.013	10489837	Locking washer 9	Sicherungsscheibe 9	
210.015	10002705	Bow handle red 150	B?gelgriff rot 150	
210.019	10624743	Key 8	Schl?ssel 8	
210.021	10258828	Cyl.screw M6x16	Zyl.Schraube M6x16	
210.023	10691713	Lock	Schloss	
210.025	10354210	Washer 6.4-St-140HV	Scheibe 6.4-St-140HV	
210.026	10693423	Angle piece	Winkelst?ck	
210.027	10753255	Holder KRYCI	Halter KRYCI	
210.028	10338176	Spring ring 6	Federring 6	
210.029	10258943	Cyl.screw M6x100	Zyl.Schraube M6x100	
210.030	10413730	Frame	Rahmen	
210.037	10933186	Door front L	T?r Front L	
210.038	10382306	Holder	Halter	
210.039	10935359	Door filter box L	T?r Filterkasten L	
210.045	10946956	Locking bolt 2	Sperrbolzen 2	
210.046	10356696	Washer 8.4-St-100HV	Scheibe 8.4-St-100HV	
210.047	10258951	Cyl.screw M8x35	Zyl.Schraube M8x35	
210.048	10258935	Cyl.screw M6x50	Zyl.Schraube M6x50	

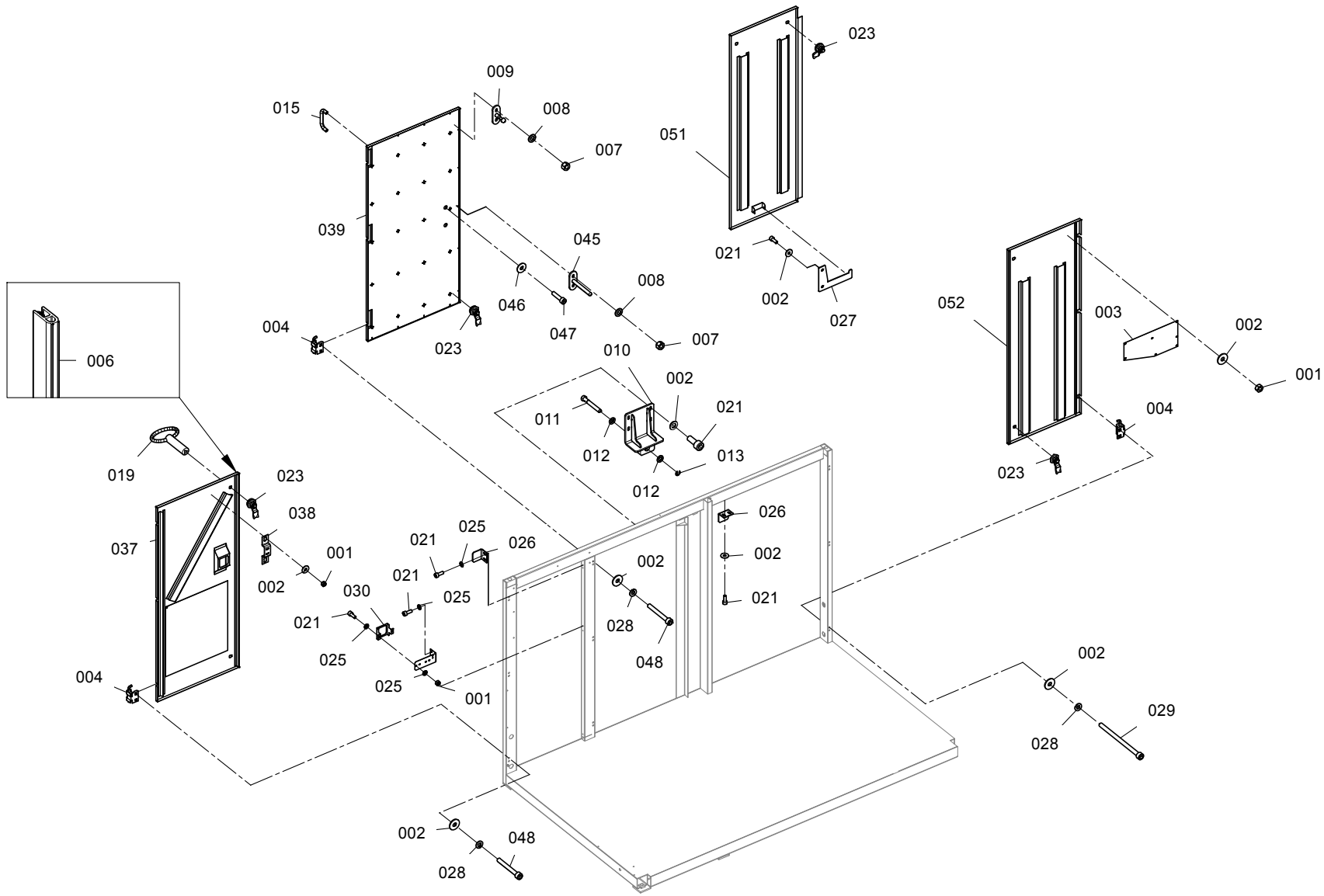
023
009
008
007
015
051
039
045
008
007
046
047
004
023
021
002
027
006
010
002
021
011
012
013
012
052
003
002
001
004
023
019
023
038
037
001
002
021
025
026
021
025
030
021
025
025
001
004
002
026
002
021
002
028
048
002
029
028
002
048
028

Catalogue no. Katalog-Nr.	Part No. Material-Nr.	Part description en	Material-Bezeichnung de	Comment Bemerkung
210.051	10934966	Cover welded L	Abdeckung geschweisst L	
210.052	10934947	Door rear L	T?r hinten L	

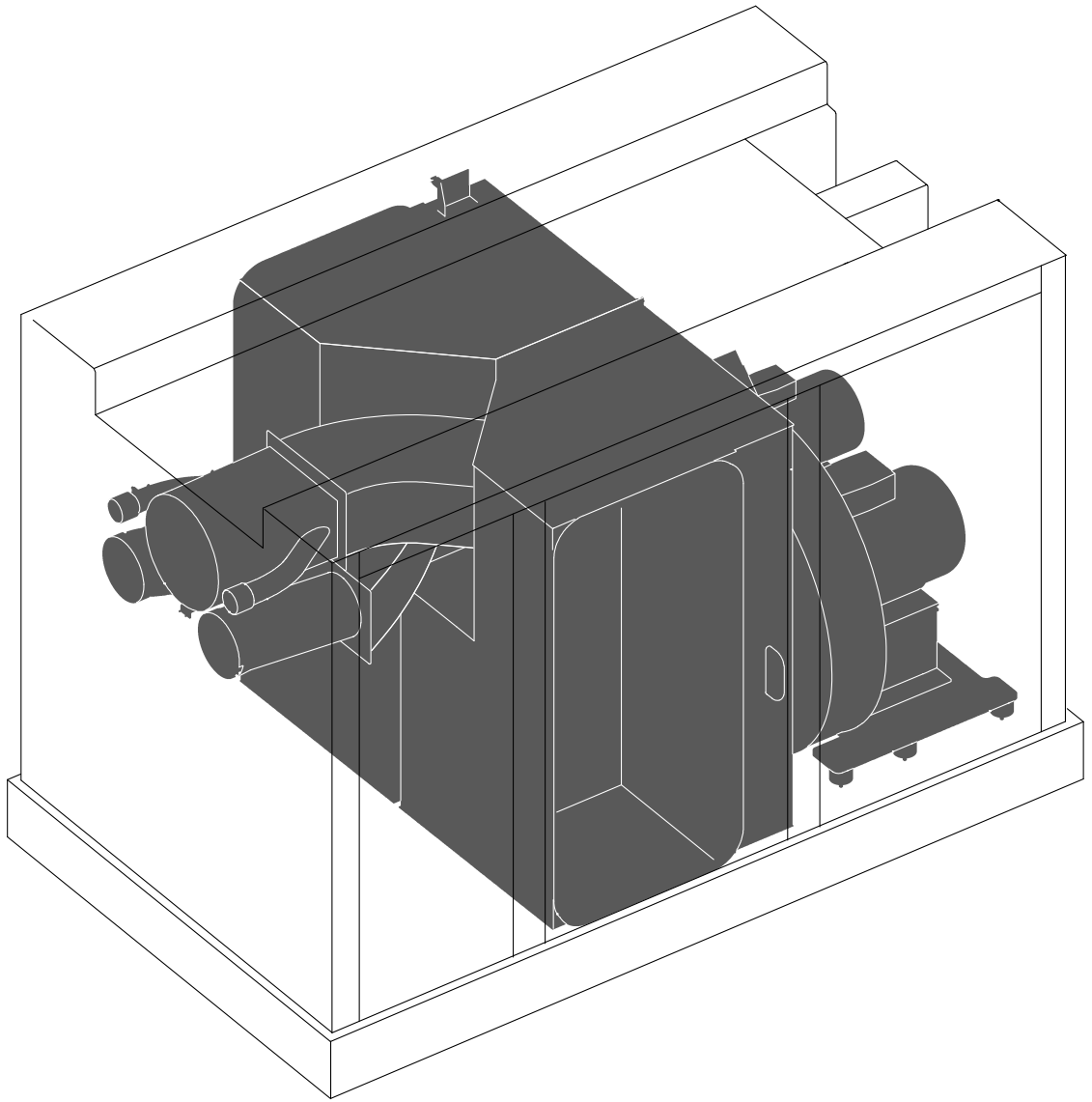

Navi_2_15_01.cgm

R 36

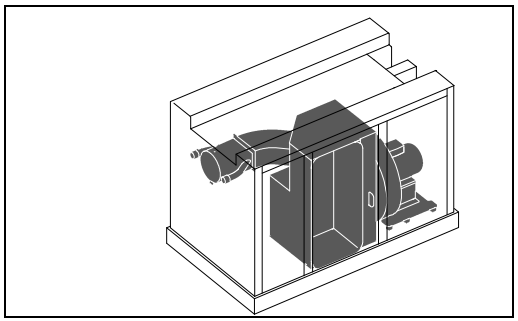

21510

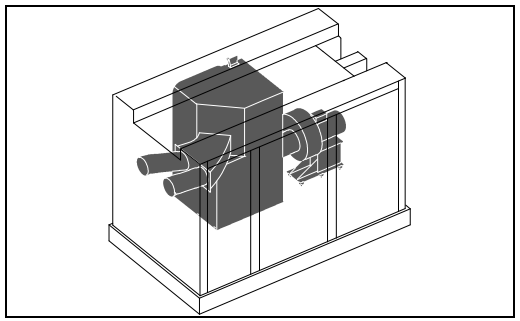

21520

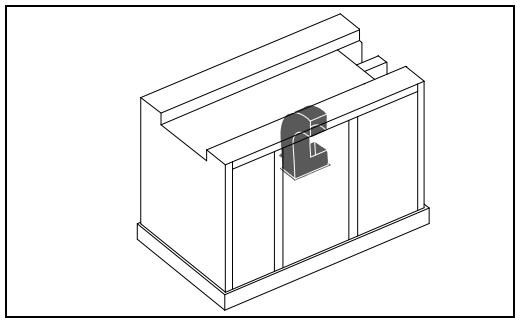

21550

R 36

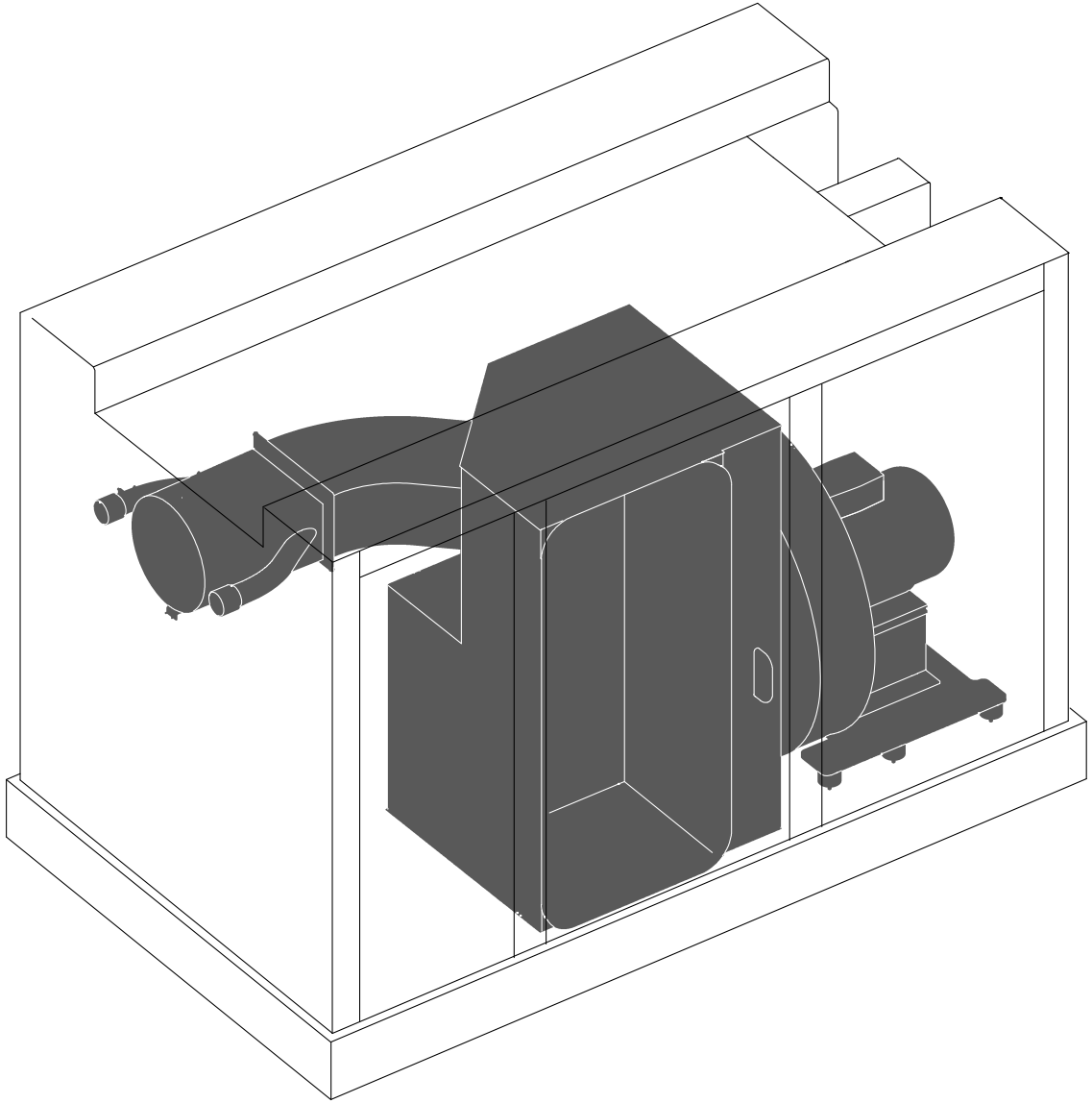

21510

Navi_2_15_10_01.cgm

R 36

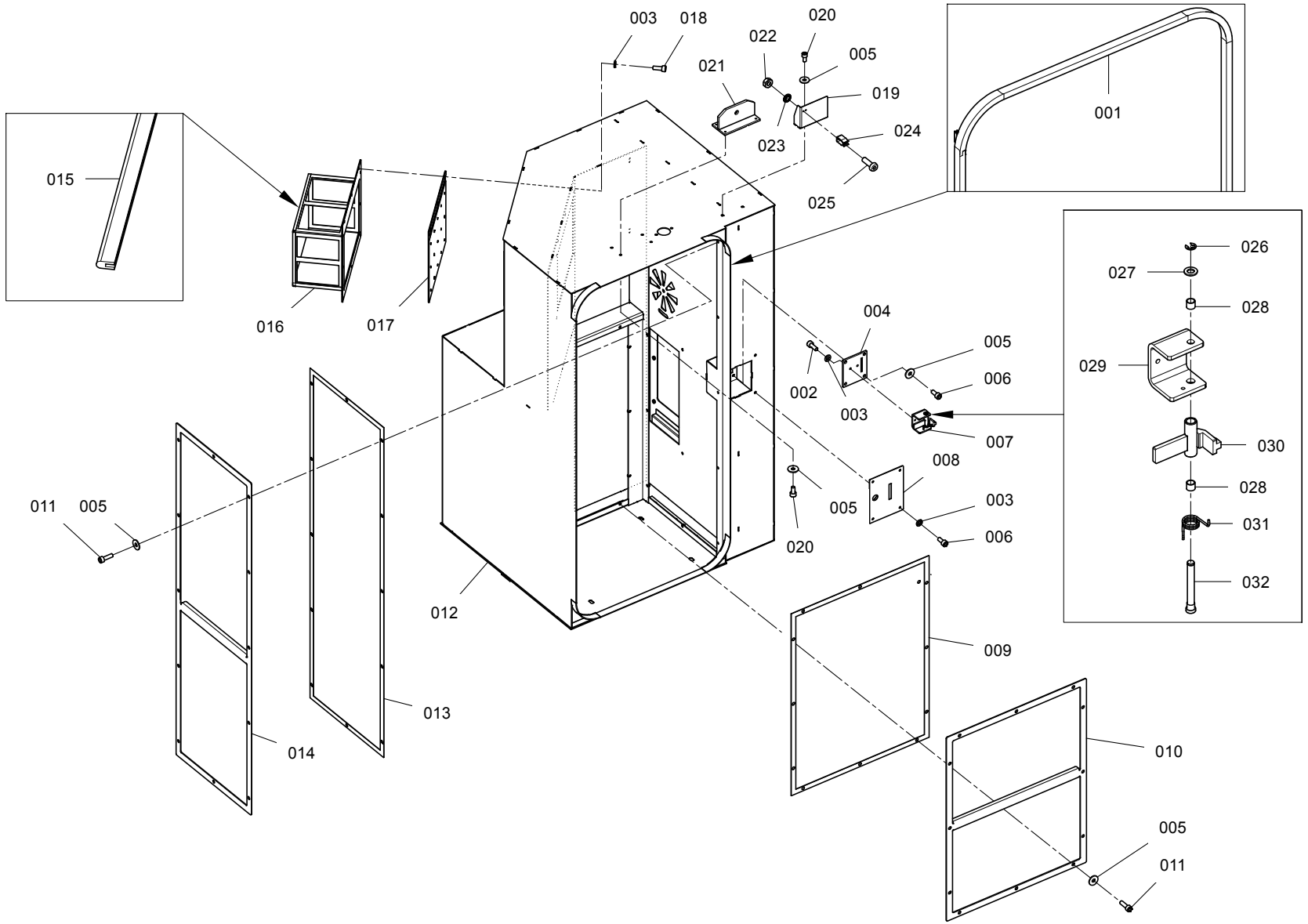

21510

RXX_2_15_10_101.cgm

Catalogue no. Katalog-Nr.	Part No. Material-Nr.	Part description en	Material-Bezeichnung de	Comment Bemerkung
21510.001	1087800	Sealing profile 14.2X23.4	Dichtungsprofil 14.2X23.4	
21510.002	10258832	Cyl.screw M6x16	Zyl.Schraube M6x16	
21510.003	10354210	Washer 6.4-St-140HV	Scheibe 6.4-St-140HV	
21510.004	10962752	Plate	Platte	
21510.005	10258855	Washer 6.4-St-100HV	Scheibe 6.4-St-100HV	
21510.006	10162086	Cyl.screw M6x14	Zyl.Schraube M6x14	
21510.007	10962720	Cylinder lock	Zylinderschloss	
21510.008	10822994	Guide	F?hrung	
21510.009	10959673	Seal 1	Dichtung 1	
21510.010	10745764	Intake filter complete 1 PES	Ansaugfilter komplett 1 PES	
21510.011	10259461	Cyl.screw M6x20	Zyl.Schraube M6x20	
21510.012	10958813	Filter box welded R V2	Filterkasten geschweisst R V2	
21510.013	10959712	Seal 2	Dichtung 2	
21510.014	10745765	Intake filter complete 2 PES	Ansaugfilter komplett 2 PES	
21510.015	10615460	Profile 20x11-EPDM	Profil 20x11-EPDM	
21510.016	10831132	Sieve insert filter box PES	Siebeinsatz Filterkasten PES	
21510.017	10936030	Flap Aero	Klappe Aero	
21510.018	10258828	Cyl.screw M6x16	Zyl.Schraube M6x16	
21510.019	10818250	Fixing device	Halterung	
21510.020	10258924	Cyl.screw M6x12	Zyl.Schraube M6x12	
21510.021	10960213	Fixing device	Halterung	
21510.022	10431757	Hexagon nut M3-8	6kt-Mutter M3-8	
21510.023	10259656	Locking washer 3.2/5.5	Sicherungsscheibe 3.2/5.5	
21510.024	10801613	Spring	Feder	
21510.025	10355992	Oval head screw M3x10	Linsenschraube M3x10	
21510.026	10356259	Locking washer 6	Sicherungsscheibe 6	
21510.027	10580160	Washer 8.4-St-200HV	Scheibe 8.4-St-200HV	
21510.028	10679833	Bushing 8/10x8-Iglidur-G	Buchse 8/10x8-Iglidur-G	
21510.029	10962733	Activator	Bet?tiger	

R 36

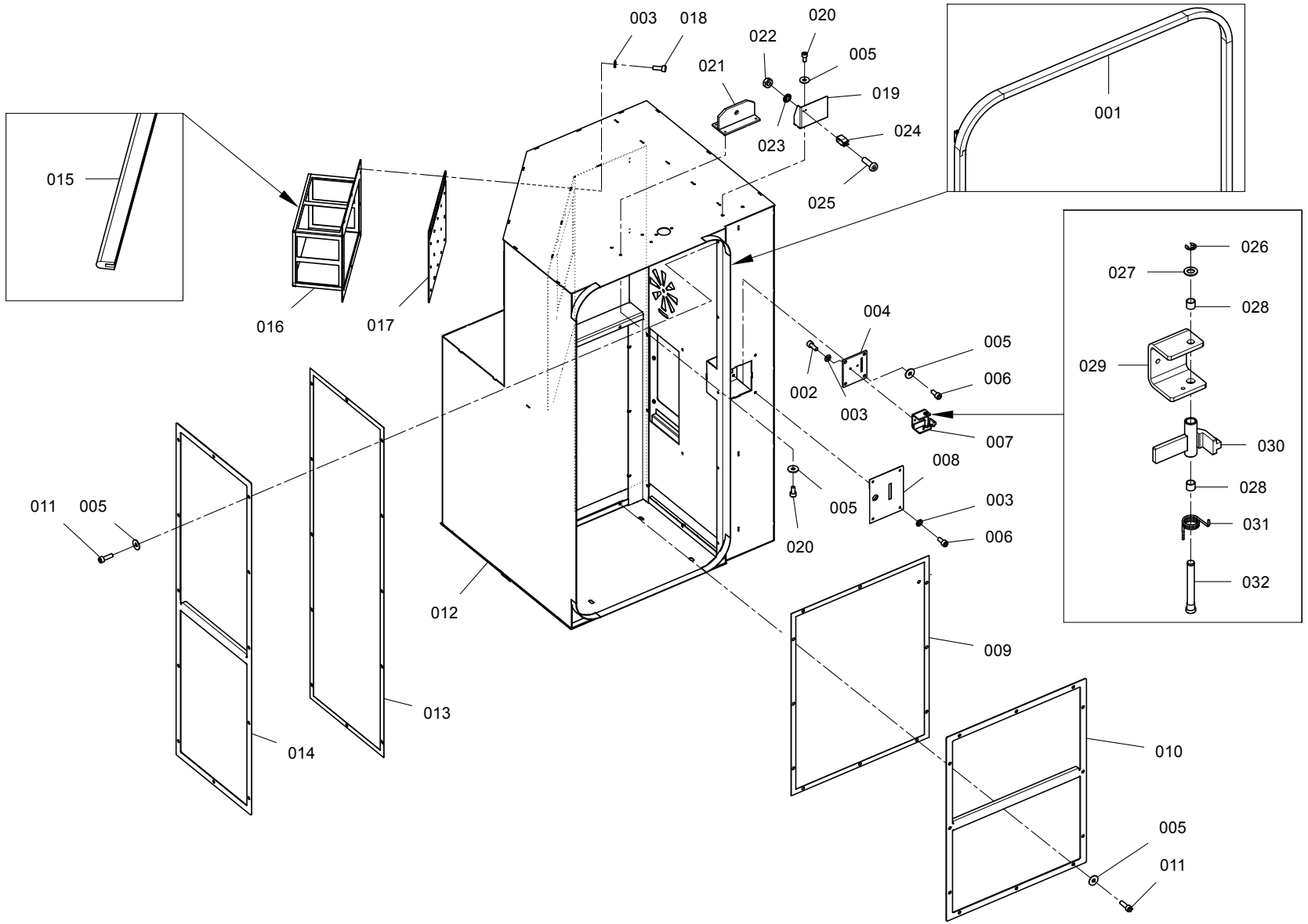

21510

RXX_2_15_10_101.cgm

Catalogue no. Katalog-Nr.	Part No. Material-Nr.	Part description en	Material-Bezeichnung de	Comment Bemerkung
21510.030	10853327	Lock pin welded R	Verriegelungsstift geschweisst R	
21510.031	10694626	Spring	Feder	
21510.032	10903137	Stud	Bolzen	

R 36

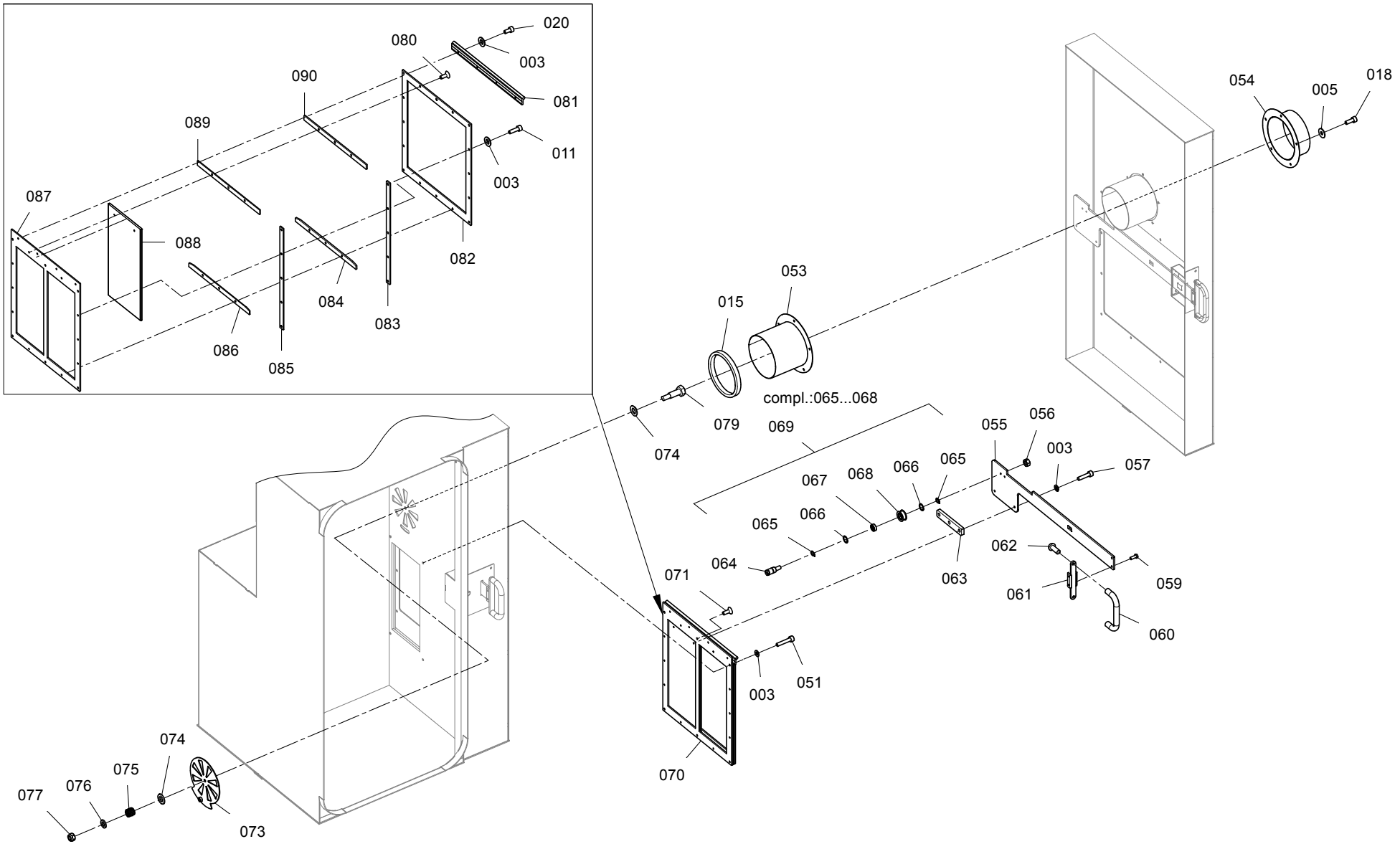

21510

RXX_2_15_10_202.cgm

Catalogue no. Katalog-Nr.	Part No. Material-Nr.	Part description en	Material-Bezeichnung de	Comment Bemerkung
21510.003	10354210	Washer 6.4-St-140HV	Scheibe 6.4-St-140HV	
21510.005	10258855	Washer 6.4-St-100HV	Scheibe 6.4-St-100HV	
21510.011	10259461	Cyl.screw M6x20	Zyl.Schraube M6x20	
21510.018	10258828	Cyl.screw M6x16	Zyl.Schraube M6x16	
21510.020	10258924	Cyl.screw M6x12	Zyl.Schraube M6x12	
21510.051	10258929	Cyl.screw M6x30	Zyl.Schraube M6x30	
21510.053	10961701	Adapter	Adapter	
21510.054	10981134	Cylinder	Zylinder	
21510.055	10955155	Guide plate	F?hrungsplatte	
21510.056	10431759	Hexagon nut M6-8	6kt-Mutter M6-8	
21510.057	10258928	Cyl.screw M6x25	Zyl.Schraube M6x25	
21510.059	10478440	Oval head screw M6x16	Linsenschraube M6x16	
21510.060	10002705	Bow handle red 150	B?gelgriff rot 150	
21510.061	10852993	Jaw	Backe	
21510.062	10542862	Oval head screw M8x20	Linsenschraube M8x20	
21510.063	11012505	Distance disk	Distanzscheibe	
21510.064	10955668	Pin pulley	Stift Riemenscheibe	
21510.065	10259513	Locking ring 10x1	Sicherungsring 10x1	
21510.066	10259509	Locking ring 26x1.2	Sicherungsring 26x1.2	
21510.067	10485245	Deep-groove ball bearing 10/26x8-6000-2R	Ri.Kugellager 10/26x8-6000-2RS	
21510.068	10955582	Pulley	Riemenscheibe	
21510.069	10955568	Pulley flap	Riemenscheibe Klappe	
21510.070	10964086	Flap complete	Klappe komplett	
21510.071	10259319	Socket flat head screw M6x30	Senkschraube M6x30	
21510.073	11000269	Flap R	Klappe R	
21510.074	10245270	Washer 10.5-St-140HV	Scheibe 10.5-St-140HV	
21510.075	10242105	Pressure spring 1.6x12.5x26	Druckfeder 1.6x12.5x26	
21510.076	10259629	Washer 8.4-St-140HV	Scheibe 8.4-St-140HV	
21510.077	10625585	Hexagon nut M8-6	6kt-Mutter M8-6	

R 36

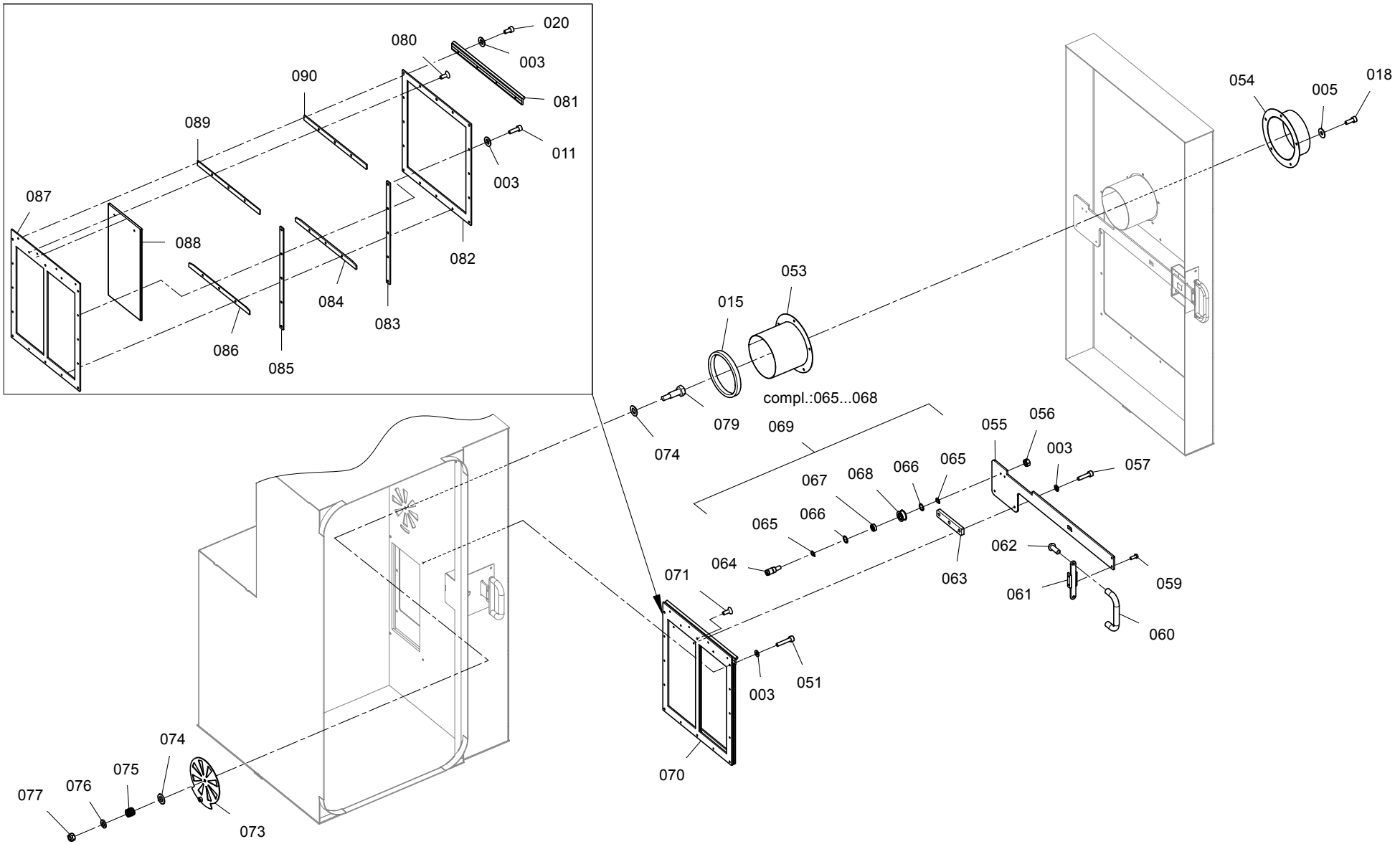

21510

RXX_2_15_10_202.cgm

Catalogue no. Katalog-Nr.	Part No. Material-Nr.	Part description en	Material-Bezeichnung de	Comment Bemerkung
21510.079	10993652	Screw	Schraube	
21510.080	10259316	Socket flat head screw M6x16	Senkschraube M6x16	
21510.081	10963651	Guide bead	F?hrungsleiste	
21510.082	10955079	Sheet B	Blech B	
21510.083	10963659	Slide insert 2B	Gleiteinsatz 2B	
21510.084	10963654	Slide insert 1B	Gleiteinsatz 1B	
21510.085	10955815	Slide insert 2A	Rutsche Einlage 2A	
21510.086	10955062	Slide insert 1A	Gleiteinsatz 1A	
21510.087	10955061	Sheet A	Blech A	
21510.088	10955073	Flap sheet	Klappe Blech	
21510.089	10964012	Insert 1A	Einlage 1A	
21510.090	10964013	Insert 1B	Einlage 1B	

R 36

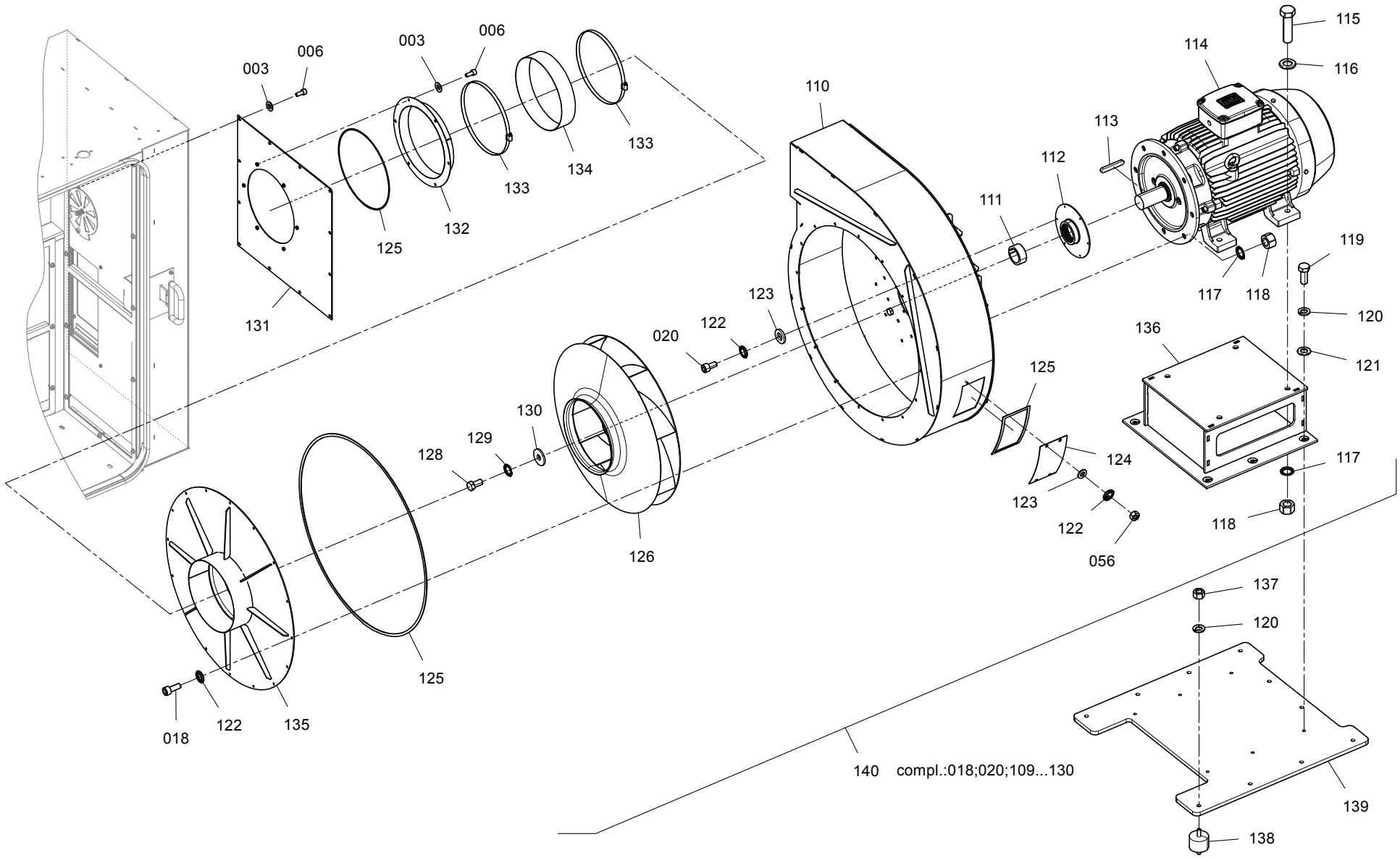

21510

RXX_2_15_10_301.cgm

Catalogue no. Katalog-Nr.	Part No. Material-Nr.	Part description en	Material-Bezeichnung de	Comment Bemerkung
21510.003	10354210	Washer 6.4-St-140HV	Scheibe 6.4-St-140HV	
21510.006	10162086	Cyl.screw M6x14	Zyl.Schraube M6x14	
21510.018	10258828	Cyl.screw M6x16	Zyl.Schraube M6x16	
21510.020	10258924	Cyl.screw M6x12	Zyl.Schraube M6x12	
21510.056	10431759	Hexagon nut M6-8	6kt-Mutter M6-8	
21510.082	10259106	Hex. screw M16x45	6kt-Schraube M16x45	
21510.110	10686359	Ventilator housing welded	L?ftergeh?use geschweisst	
21510.110	10929912	Ventilator housing welded	L?ftergeh?use geschweisst	
21510.111	10351523	Distance ring	Distanzring	
21510.111	10755382	Distance ring /3	Distanzring /3	
21510.111	10933963	Distance ring 37kW	Distanzring 37kW	
21510.112	10351524	Labyrinth ring welded KPL	Labyrinthring geschweisst KPL	
21510.112	10755344	Labyrinth ring welded /3	Labyrinthring geschweisst /3	
21510.112	10933964	Labyrinth ring welded 37kW	Labyrinthring geschweisst 37kW	
21510.114	10842304	Motor B35T 18,5KW IE3	Motor B35T 18,5KW IE3	
21510.114	10842305	Motor B35T 22kW IE3	Motor B35T 22kW IE3	
21510.114	10931826	Motor B35T 37kW IE3	Motor B35T 37kW IE3	
21510.115	10259194	Hex. screw M14x55	6kt-Schraube M14x55	
21510.115	10490985	Hex. screw M16x60	6kt-Schraube M16x60	
21510.116	10259632	Washer 17-St-140HV	Scheibe 17-St-140HV	
21510.116	10478063	Washer 15-St-200HV	Scheibe 15-St-200HV	
21510.117	10436443	Locking washer 17/24	Sicherungsscheibe 17/24	
21510.117	10604800	Locking washer 15/22	Sicherungsscheibe 15/22	
21510.118	10431842	Hexagon nut M14-8	6kt-Mutter M14-8	
21510.118	10431843	Hexagon nut M16-8	6kt-Mutter M16-8	
21510.119	10259097	Hex. screw M12x30	6kt-Schraube M12x30	
21510.120	10356572	Spring ring 12	Federring 12	
21510.121	10455614	Washer 13-St-200HV	Scheibe 13-St-200HV	
21510.122	10259659	Locking washer 6.4/10	Sicherungsscheibe 6.4/10	

R 36

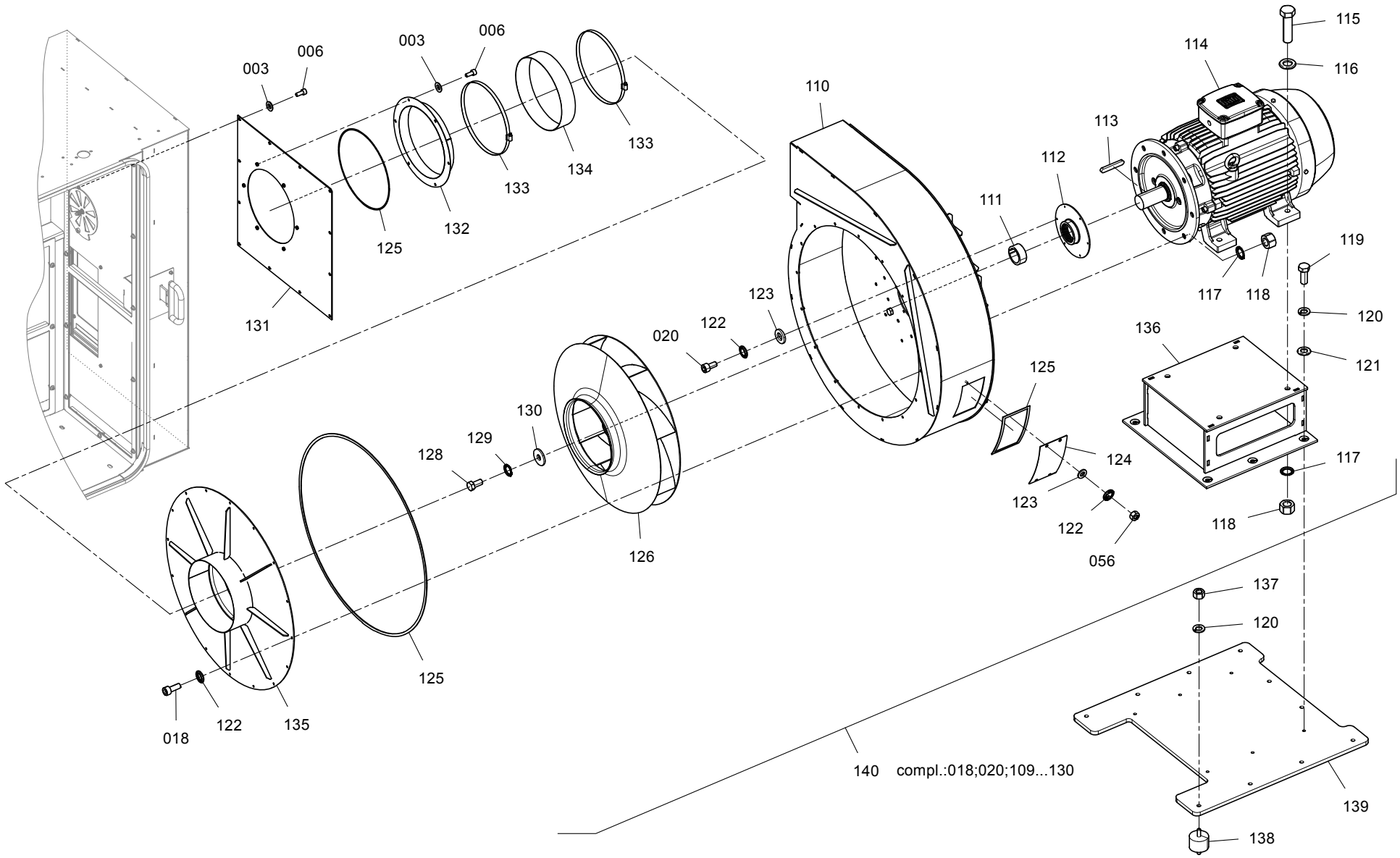

21510

RXX_2_15_10_301.cgm

Catalogue no. Katalog-Nr.	Part No. Material-Nr.	Part description en	Material-Bezeichnung de	Comment Bemerkung
21510.123	10456142	Washer 6.4-St-200HV	Scheibe 6.4-St-200HV	
21510.124	10729116	Cover complete 2	Abdeckung komplett 2	
21510.125	10632942	Plastic foam AU-9x3	Schaumstoff AU-9x3	
21510.126	10696619	Impeller TV	Laufrad TV	
21510.126	10755256	Impeller TV/3	Laufrad TV/3	
21510.126	10929992	Impeller TV 37kW	Laufrad TV 37kW	
21510.128	10259798	Cyl.screw M16x35	Zyl.Schraube M16x35	
21510.130	10755390	Washer /3	Scheibe /3	
21510.130	10934099	Washer 37kW	Scheibe 37kW	
21510.130	UE7564840	Washer	Scheibe	
21510.131	10933109	Rear wall	R?ckwand	
21510.131	10953096	Rear wall 37kW	R?ckwand 37kW	
21510.132	10686433	Suction pipe	Saugrohr	
21510.132	10953107	Suction pipe 37kW	Saugrohr 37kW	
21510.133	10570130	Tube clip A-270-290-W1-2	Schlauchklemme A-270-290-W1-2	
21510.133	10952417	Tube clip A-230-250-W1-2	Schlauchklemme A-230-250-W1-2	
21510.134	10791799	Hose di220x2x80-EPDM	Schlauch di220x2x80-EPDM	
21510.134	10953125	Hose di260x2x80-EPDM	Schlauch di260x2x80-EPDM	
21510.134	10968037	Hose di280x2x80-EPDM	Schlauch di280x2x80-EPDM	
21510.135	10686380	Lid welded	Deckel geschweisst	
21510.135	10929917	Lid welded	Deckel geschweisst	
21510.136	10729315	Motor mounting plate welded	Motorkonsole geschweisst	
21510.136	10755472	Motor mounting plate welded /3	Motorkonsole geschweisst /3	
21510.136	10934288	Motor mounting plate welded 37kW	Motorkonsole geschweisst 37kW	
21510.137	10431841	Hexagon nut M12-8	6kt-Mutter M12-8	
21510.138	U82772446	Spring 70/48/M12x32 - ShA60	Feder 70/48/M12x32 - ShA60	
21510.139	10729064	Base plate	Grundplatte	
21510.139	10934352	Base plate	Grundplatte	
21510.140	10929890	Fan 37kW IE3	Ventilator 37kW IE3	
21510.140	10940968	Fan 22kW IE3	Ventilator 22kW IE3	

R 36

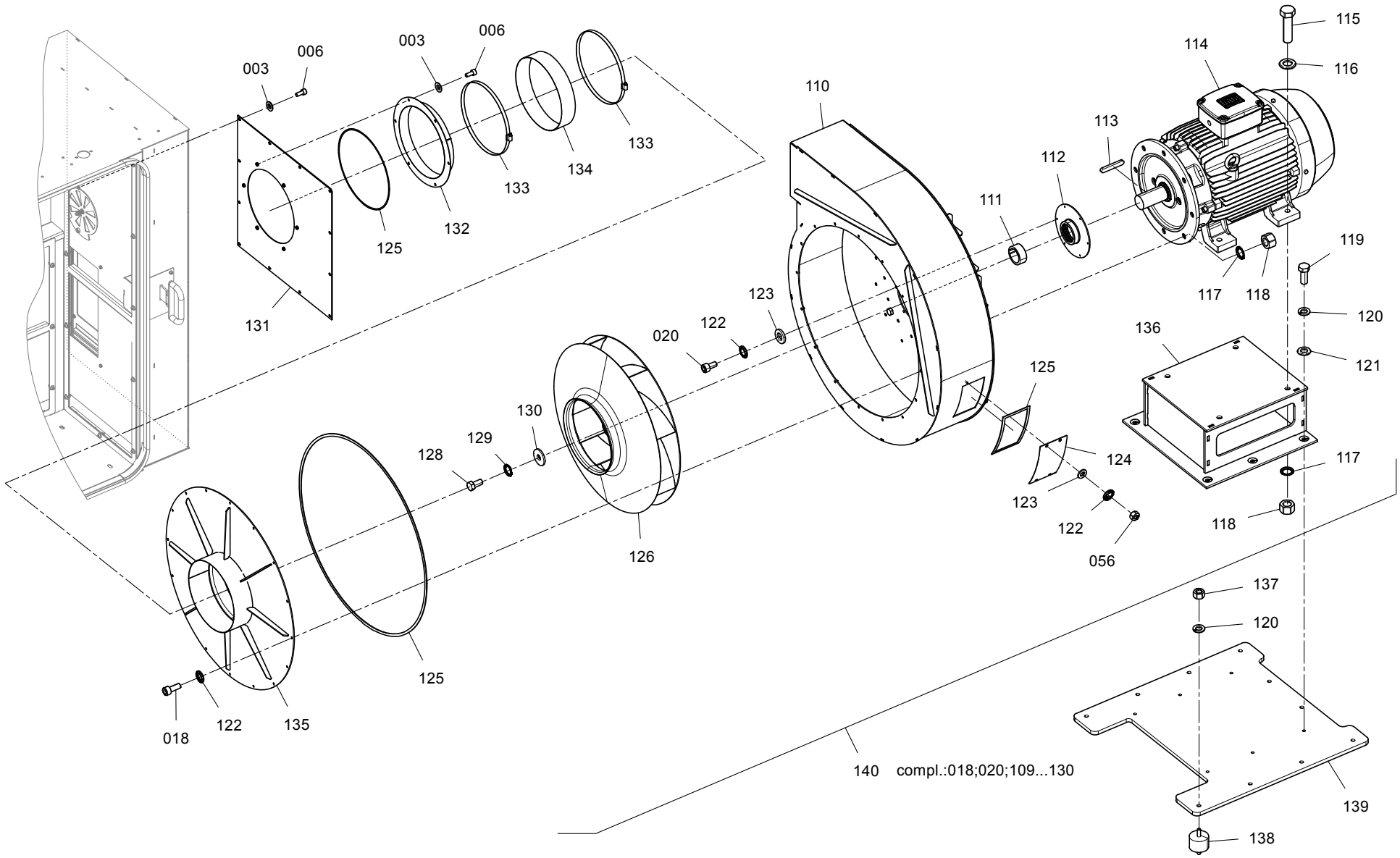

21510

RXX_2_15_10_301.cgm

Catalogue no. Katalog-Nr.	Part No. Material-Nr.	Part description en	Material-Bezeichnung de	Comment Bemerkung
21510.140	10941036	Fan 18,5kW IE3	Ventilator 18,5kW IE3	

R 36

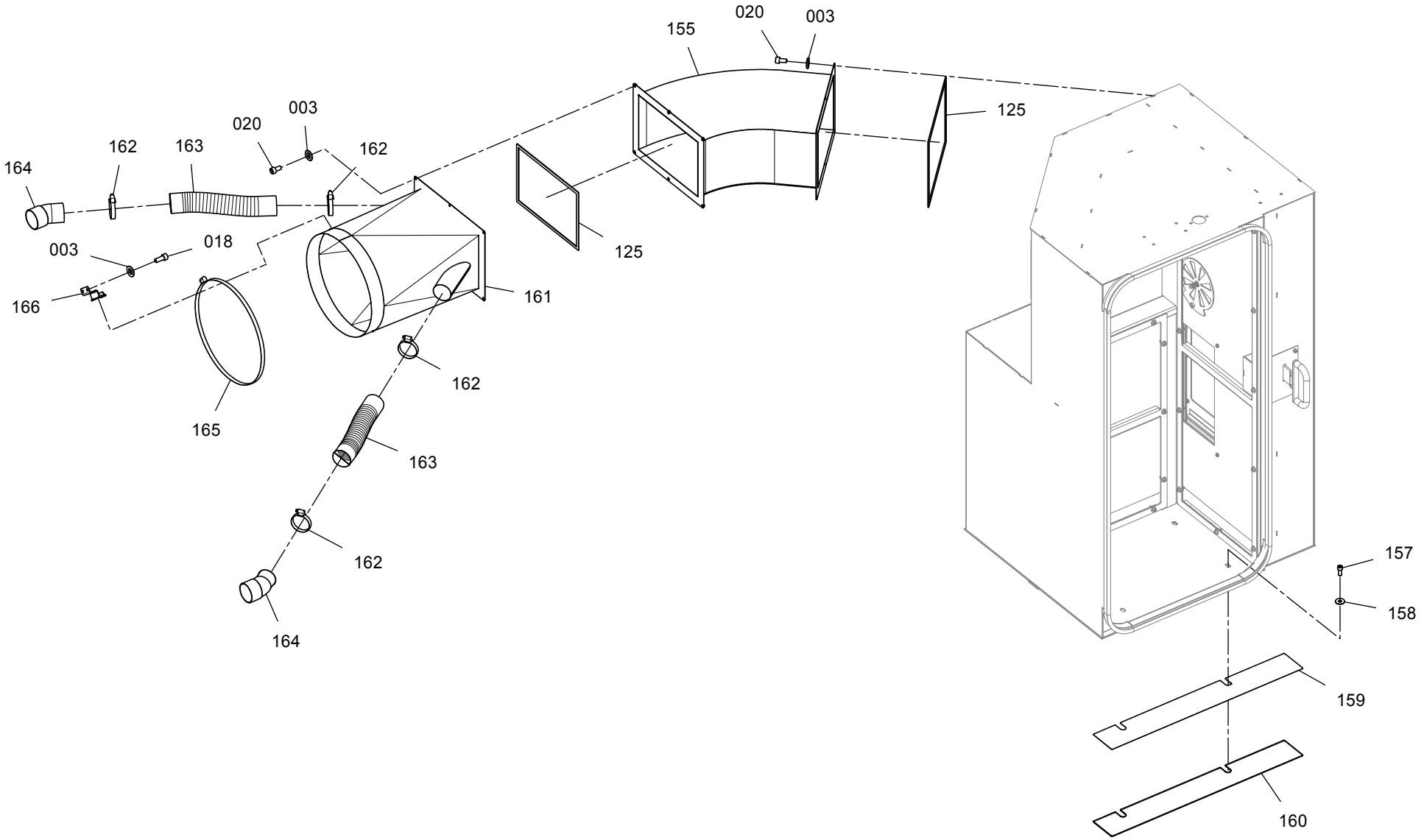

21510

RXX_2_15_10_401.cgm

Catalogue no. Katalog-Nr.	Part No. Material-Nr.	Part description en	Material-Bezeichnung de	Comment Bemerkung
21510.003	10354210	Washer 6.4-St-140HV	Scheibe 6.4-St-140HV	
21510.018	10258828	Cyl.screw M6x16	Zyl.Schraube M6x16	
21510.020	10258924	Cyl.screw M6x12	Zyl.Schraube M6x12	
21510.125	10632942	Plastic foam AU-9x3	Schaumstoff AU-9x3	
21510.155	10724096	Channel	Kanal	
21510.157	10241974	Cyl.screw M10x25	Zyl.Schraube M10x25	
21510.158	10356624	Washer 10.5-St-100HV	Scheibe 10.5-St-100HV	
21510.159	10963496	Washer 1.5mm	Scheibe 1.5mm	
21510.160	10963426	Washer 3mm	Scheibe 3mm	
21510.161	10724048	Transition duct	?bergangskanal	
21510.161	10946279	Transition duct V2	?bergangskanal V2	
21510.162	10570096	Tube clip A-50-70-W1-2	Schlauchklemme A-50-70-W1-2	
21510.163	10924566	Hose FLEXADUR PU-3H O D=63mm	Schlauch FLEXADUR PU-3H O D=63mm	
21510.164	10924012	Elbow 30?, D63	Kr?mmer 30?, D63	
21510.165	10438611	Tube clip A-350-370-W1-1	Schlauchklemme A-350-370-W1-1	
21510.166	10971330	Channel support V2	Kanaltr?ger V2	

R 36

RIETER

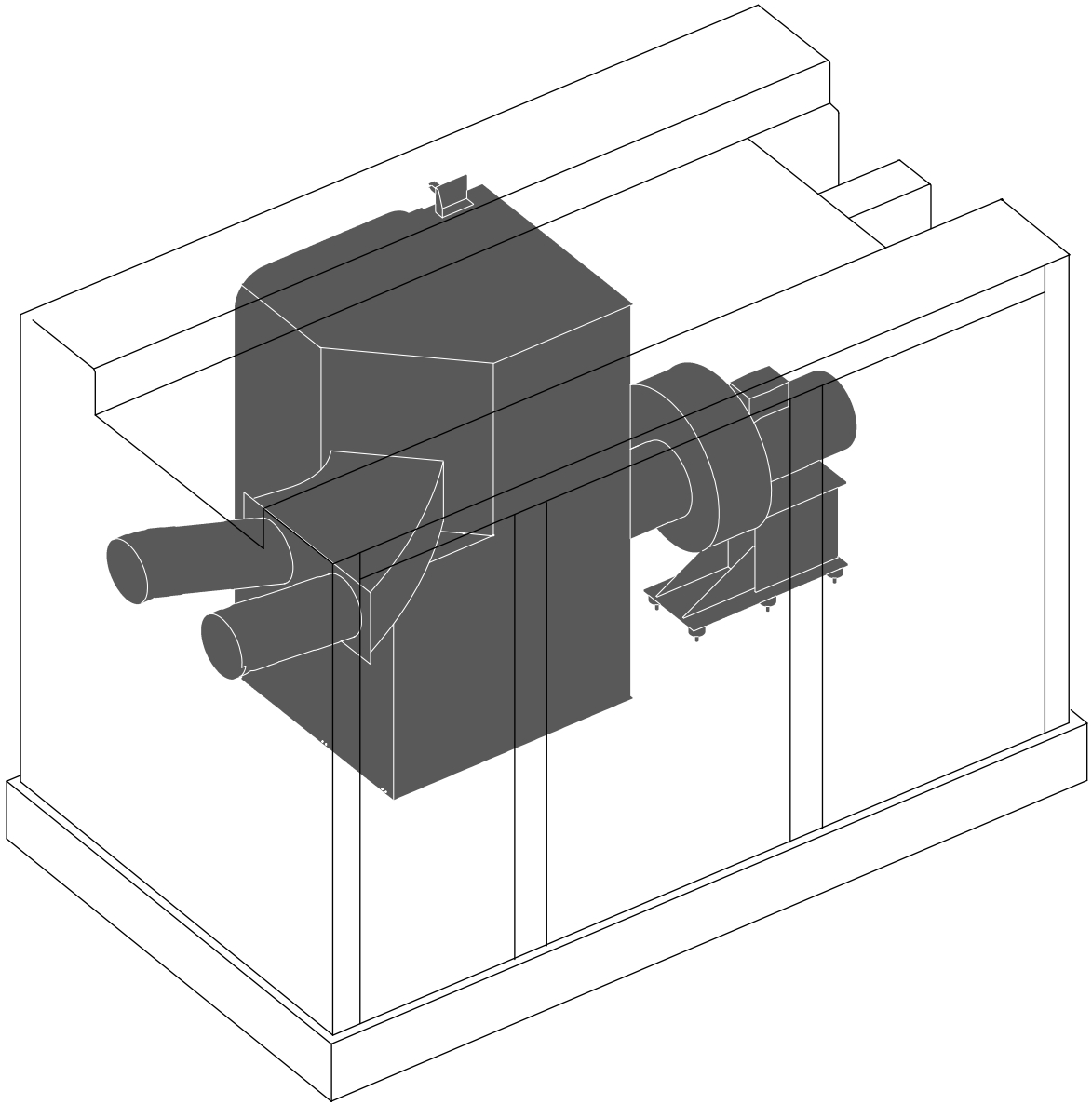

21520

Navi_2_15_20_01.cgm

R 36

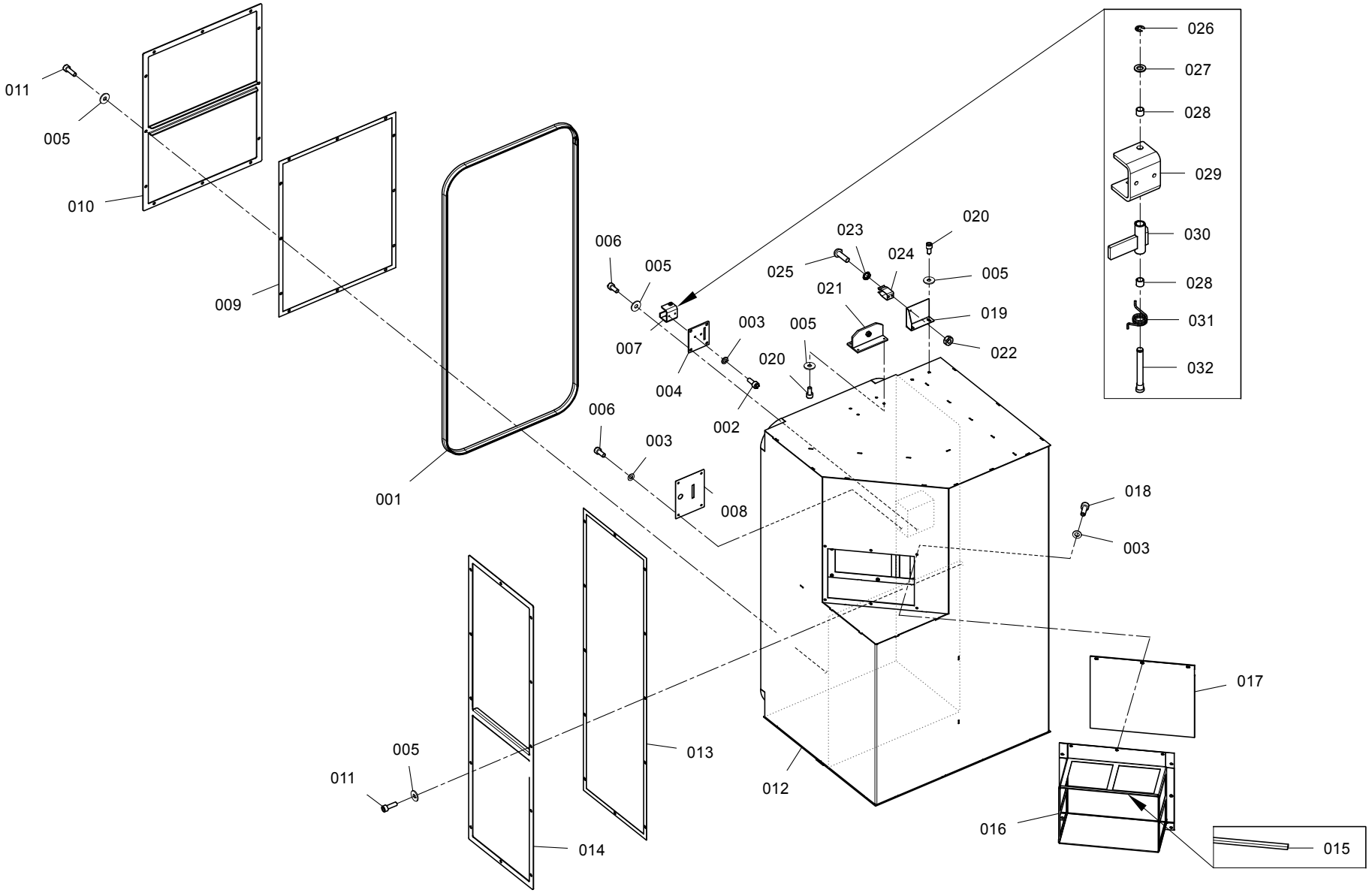

21520

RXX_2_15_20_101.cgm

Catalogue no. Katalog-Nr.	Part No. Material-Nr.	Part description en	Material-Bezeichnung de	Comment Bemerkung
21520.001	1087800	Sealing profile 14.2X23.4	Dichtungsprofil 14.2X23.4	
21520.002	10258832	Cyl.screw M6x16	Zyl.Schraube M6x16	
21520.003	10354210	Washer 6.4-St-140HV	Scheibe 6.4-St-140HV	
21520.004	10962752	Plate	Platte	
21520.005	10258855	Washer 6.4-St-100HV	Scheibe 6.4-St-100HV	
21520.006	10162086	Cyl.screw M6x14	Zyl.Schraube M6x14	
21520.007	10963194	Cylinder lock L	Zylinderschloss L	
21520.008	10822994	Guide	F?hrung	
21520.009	10959673	Seal 1	Dichtung 1	
21520.010	10745764	Intake filter complete 1 PES	Ansaugfilter komplett 1 PES	
21520.011	10259461	Cyl.screw M6x20	Zyl.Schraube M6x20	
21520.012	10958812	Filter box welded L V2	Filterkasten geschweisst L V2	
21520.013	10959712	Seal 2	Dichtung 2	
21520.014	10745765	Intake filter complete 2 PES	Ansaugfilter komplett 2 PES	
21520.015	10615460	Profile 20x11-EPDM	Profil 20x11-EPDM	
21520.016	10831132	Sieve insert filter box PES	Siebeinsatz Filterkasten PES	
21520.017	11012079	Flap Aero	Klappe Aero	
21520.018	10258828	Cyl.screw M6x16	Zyl.Schraube M6x16	
21520.019	10818342	Fixing device 2	Halterung 2	
21520.020	10258924	Cyl.screw M6x12	Zyl.Schraube M6x12	
21520.021	10960213	Fixing device	Halterung	
21520.022	10431757	Hexagon nut M3-8	6kt-Mutter M3-8	
21520.023	10259656	Locking washer 3.2/5.5	Sicherungsscheibe 3.2/5.5	
21520.024	10801613	Spring	Feder	
21520.025	10355992	Oval head screw M3x10	Linsenschraube M3x10	
21520.026	10356259	Locking washer 6	Sicherungsscheibe 6	
21520.027	10580160	Washer 8.4-St-200HV	Scheibe 8.4-St-200HV	
21520.028	10679833	Bushing 8/10x8-Iglidur-G	Buchse 8/10x8-Iglidur-G	
21520.029	10963197	Activator L	Bet?tiger L	

R 36

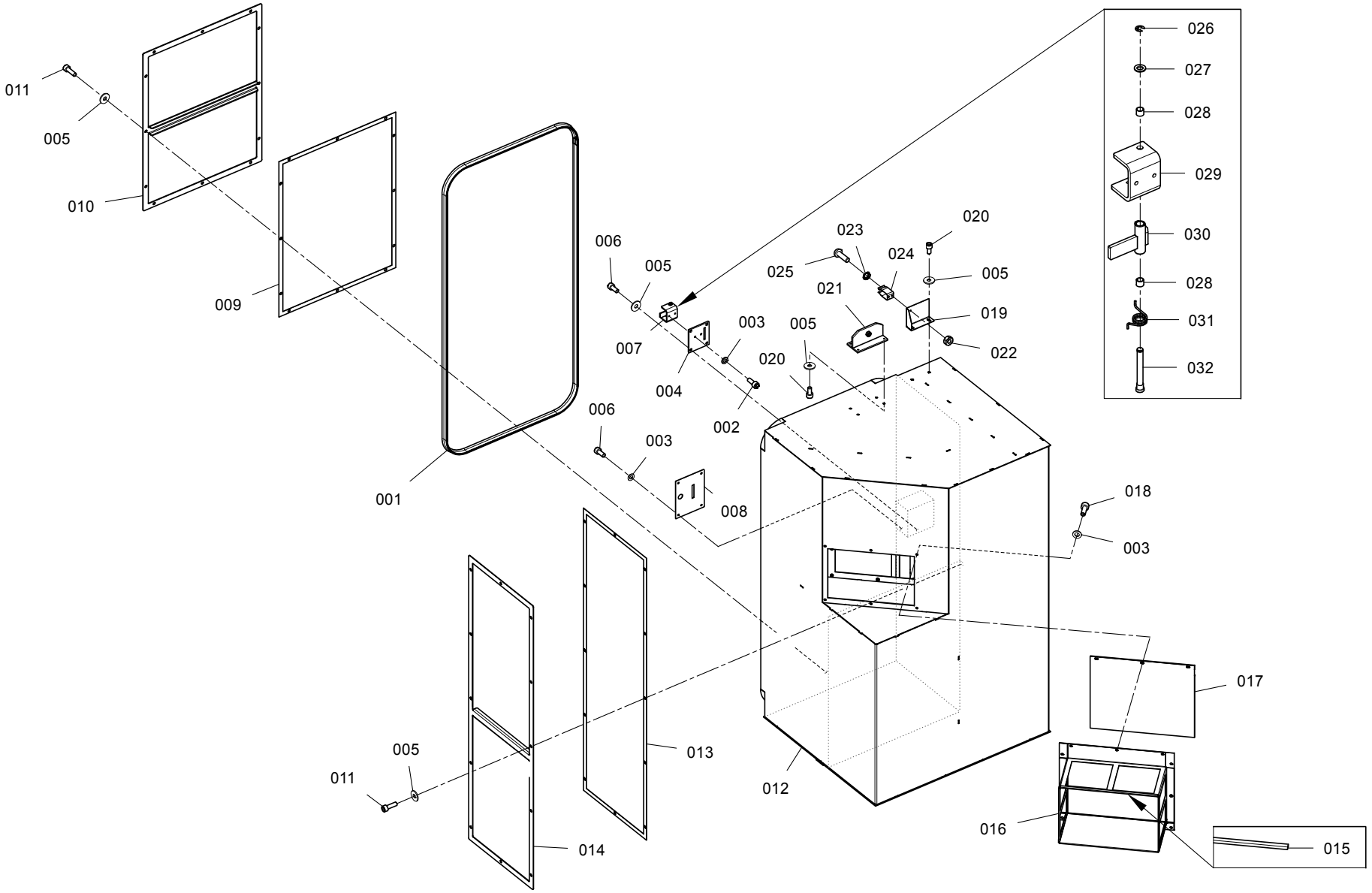

21520

RXX_2_15_20_101.cgm

Catalogue no. Katalog-Nr.	Part No. Material-Nr.	Part description en	Material-Bezeichnung de	Comment Bemerkung
21520.030	10934726	Lock pin welded L	Verriegelungsstift geschweisst L	
21520.031	10691700	Spring	Feder	
21520.032	10903137	Stud	Bolzen	

R 36

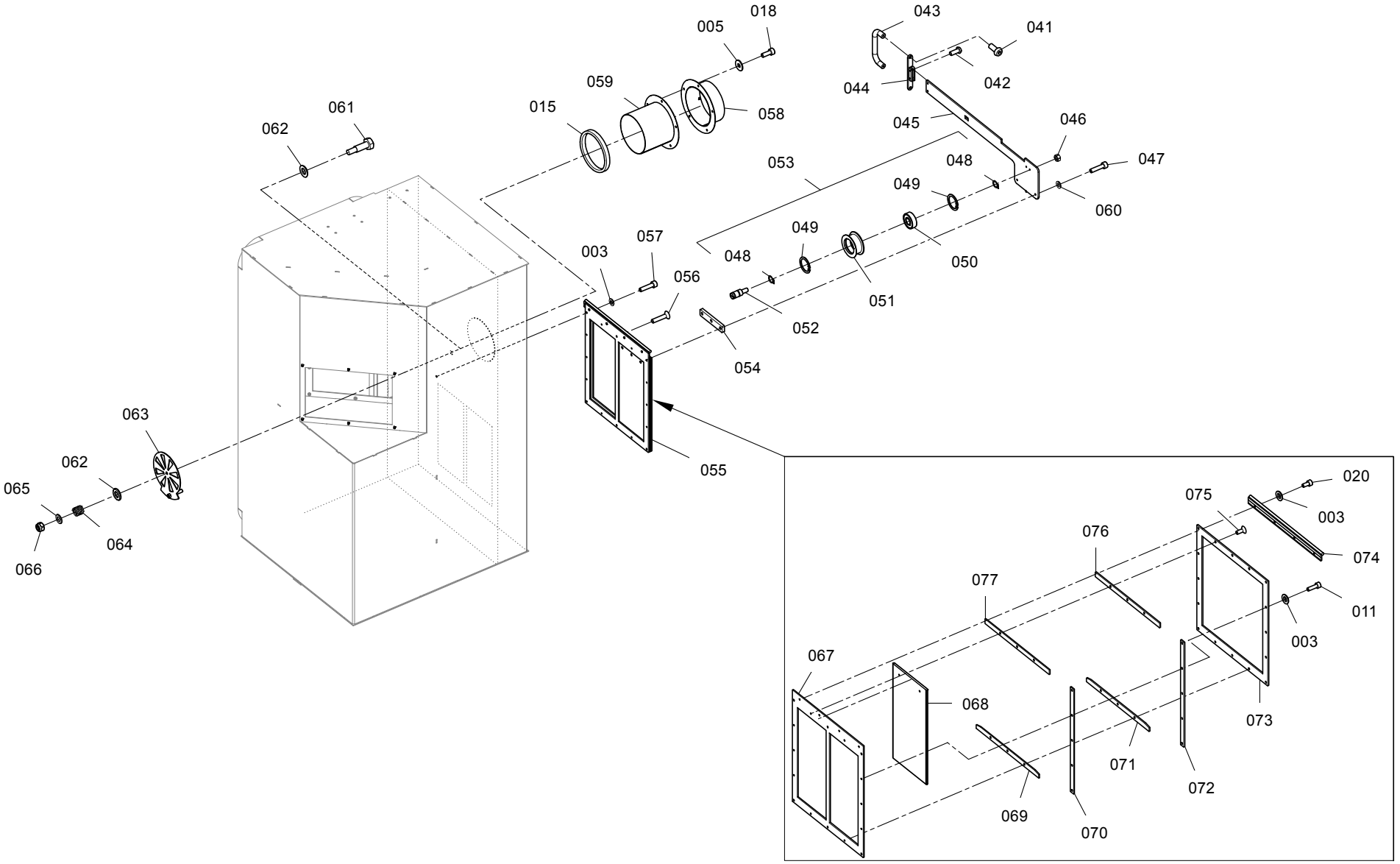

21520

RXX_2_15_20_201.cgm

Catalogue no. Katalog-Nr.	Part No. Material-Nr.	Part description en	Material-Bezeichnung de	Comment Bemerkung
21520.003	10354210	Washer 6.4-St-140HV	Scheibe 6.4-St-140HV	
21520.011	10259461	Cyl.screw M6x20	Zyl.Schraube M6x20	
21520.020	10258924	Cyl.screw M6x12	Zyl.Schraube M6x12	
21520.041	10542862	Oval head screw M8x20	Linsenschraube M8x20	
21520.042	10478440	Oval head screw M6x16	Linsenschraube M6x16	
21520.043	10002705	Bow handle red 150	B?gelgriff rot 150	
21520.044	10852993	Jaw	Backe	
21520.045	10955155	Guide plate	F?hrungsplatte	
21520.046	10431759	Hexagon nut M6-8	6kt-Mutter M6-8	
21520.047	10241974	Cyl.screw M10x25	Zyl.Schraube M10x25	
21520.048	10259513	Locking ring 10x1	Sicherungsring 10x1	
21520.049	10259509	Locking ring 26x1.2	Sicherungsring 26x1.2	
21520.050	10485245	Deep-groove ball bearing 10/26x8-6000-2R	Ri.Kugellager 10/26x8-6000-2RS	
21520.051	10955582	Pulley	Riemenscheibe	
21520.052	10955668	Pin pulley	Stift Riemenscheibe	
21520.053	10955568	Pulley flap	Riemenscheibe Klappe	
21520.054	11012505	Distance disk	Distanzscheibe	
21520.055	10965790	Flap complete L	Klappe komplett L	
21520.056	10259319	Socket flat head screw M6x30	Senkschraube M6x30	
21520.057	10258929	Cyl.screw M6x30	Zyl.Schraube M6x30	
21520.058	10981134	Cylinder	Zylinder	
21520.059	10961701	Adapter	Adapter	
21520.060	10259423	Locking washer 10.5/16	Sicherungsscheibe 10.5/16	
21520.061	10993652	Screw	Schraube	
21520.062	10245270	Washer 10.5-St-140HV	Scheibe 10.5-St-140HV	
21520.063	11000267	Flap L	Klappe L	
21520.064	10242105	Pressure spring 1.6x12.5x26	Druckfeder 1.6x12.5x26	
21520.065	10259629	Washer 8.4-St-140HV	Scheibe 8.4-St-140HV	
21520.066	10625585	Hexagon nut M8-6	6kt-Mutter M8-6	

R 36

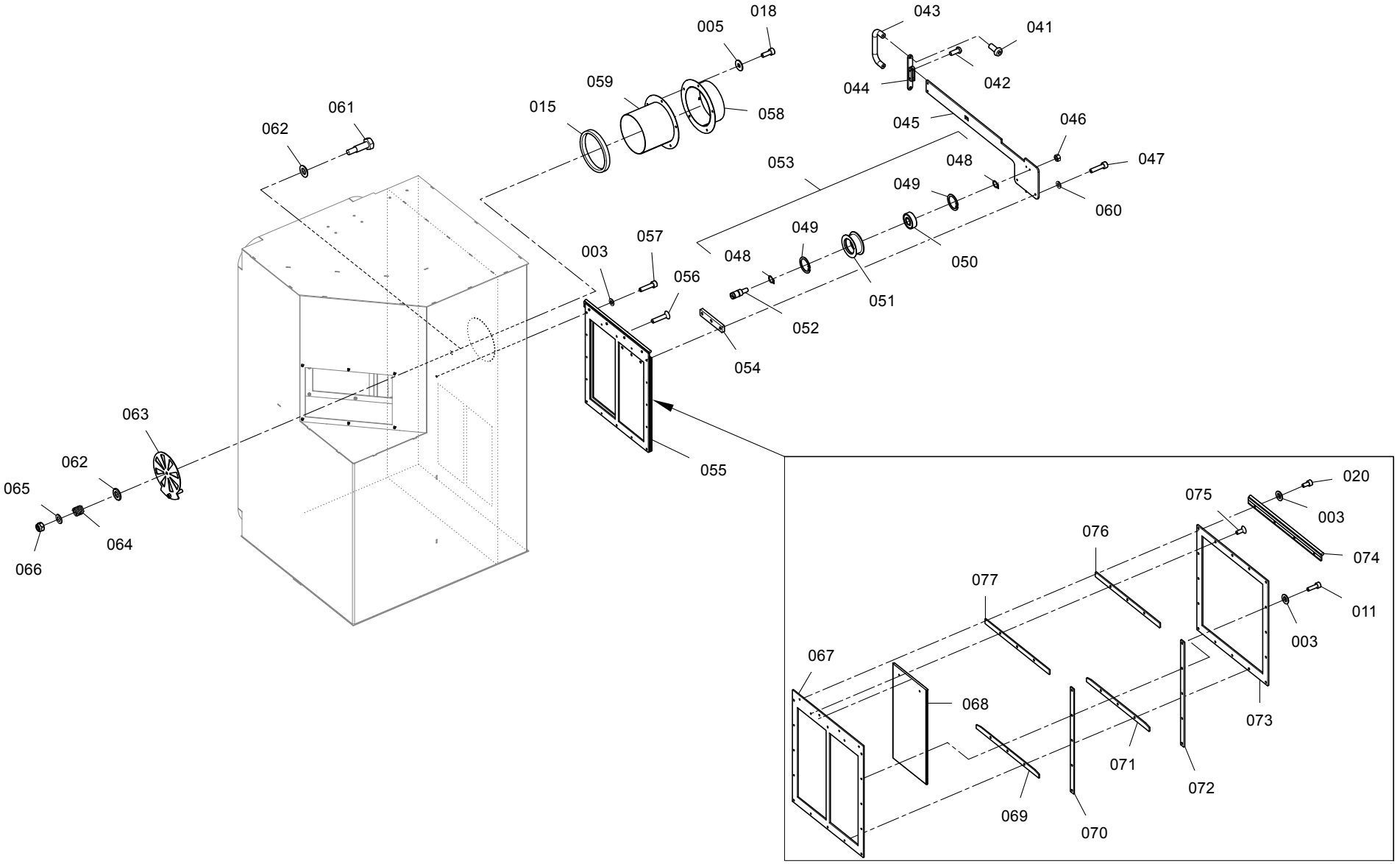

21520

RXX_2_15_20_201.cgm

Catalogue no. Katalog-Nr.	Part No. Material-Nr.	Part description en	Material-Bezeichnung de	Comment Bemerkung
21520.067	10955061	Sheet A	Blech A	
21520.068	10955073	Flap sheet	Klappe Blech	
21520.069	10955062	Slide insert 1A	Gleiteinsatz 1A	
21520.070	10955815	Slide insert 2A	Rutsche Einlage 2A	
21520.071	10963654	Slide insert 1B	Gleiteinsatz 1B	
21520.072	10963659	Slide insert 2B	Gleiteinsatz 2B	
21520.073	10955079	Sheet B	Blech B	
21520.074	10963651	Guide bead	F?hrungsleiste	
21520.075	10259316	Socket flat head screw M6x16	Senkschraube M6x16	
21520.076	10964013	Insert 1B	Einlage 1B	
21520.077	10964012	Insert 1A	Einlage 1A	

R 36

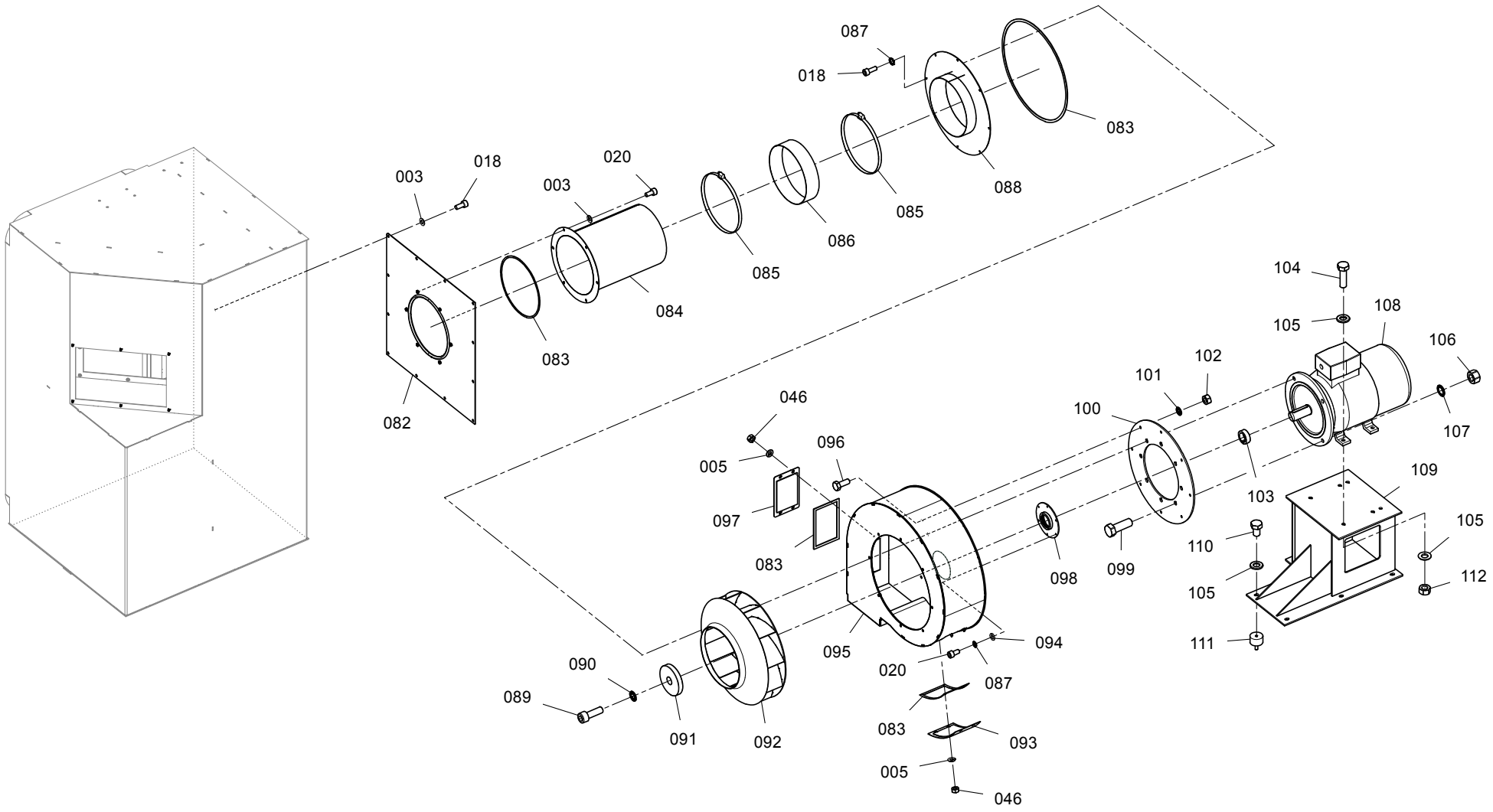

21520

RXX_2_15_20_301.cgm

Catalogue no. Katalog-Nr.	Part No. Material-Nr.	Part description en	Material-Bezeichnung de	Comment Bemerkung
21520.003	10354210	Washer 6.4-St-140HV	Scheibe 6.4-St-140HV	
21520.005	10258855	Washer 6.4-St-100HV	Scheibe 6.4-St-100HV	
21520.018	10258828	Cyl.screw M6x16	Zyl.Schraube M6x16	
21520.020	10258924	Cyl.screw M6x12	Zyl.Schraube M6x12	
21520.046	10431759	Hexagon nut M6-8	6kt-Mutter M6-8	
21520.082	11016213	Rear wall suction for waste removal 1	R?ckwand Schmutzabsaugung 1	
21520.083	10632942	Plastic foam AU-9x3	Schaumstoff AU-9x3	
21520.084	11016199	Suction pipe 600 ON 1	Saugrohr 600 ON 1	
21520.085	144711	Tube clip A-290-310 -W1-1	Schlauchklemme A-290-310 -W1-1	
21520.086	10791799	Hose di220x2x80-EPDM	Schlauch di220x2x80-EPDM	
21520.086	10968037	Hose di280x2x80-EPDM	Schlauch di280x2x80-EPDM	
21520.087	10003108	Locking washer 6.4/10	Sicherungsscheibe 6.4/10	
21520.088	11015934	Fan hood	Ventilatorhaube	
21520.089	10258966	Cyl.screw M10x30	Zyl.Schraube M10x30	
21520.090	10259662	Locking washer 10.5/16	Sicherungsscheibe 10.5/16	
21520.091	10755743	Washer D50/M12	Scheibe D50/M12	
21520.092	10926093	Impeller	Laufrad	
21520.093	10942167	Lid	Deckel	
21520.094	10259678	Washer 6.4-St-200HV	Scheibe 6.4-St-200HV	
21520.095	10926145	Fan housing	Ventilatorgeh?use	
21520.096	10259085	Hex. screw M8x20	6kt-Schraube M8x20	
21520.097	10727870	Lid 1	Deckel 1	
21520.098	10696581	Labyrinth ring	Labyrinthring	
21520.099	10259098	Hex. screw M12x35	6kt-Schraube M12x35	
21520.100	10699276	Fastening plate	Befestigungsplatte	
21520.101	10259660	Locking washer 8.4/13	Sicherungsscheibe 8.4/13	
21520.102	10259607	Hexagon nut M8-8	6kt-Mutter M8-8	
21520.103	10696560	Distance ring	Distanzring	
21520.104	10259094	Hex. screw M10x35	6kt-Schraube M10x35	
21520.105	10542604	Washer 10.5-St-200HV	Scheibe 10.5-St-200HV	

R 36

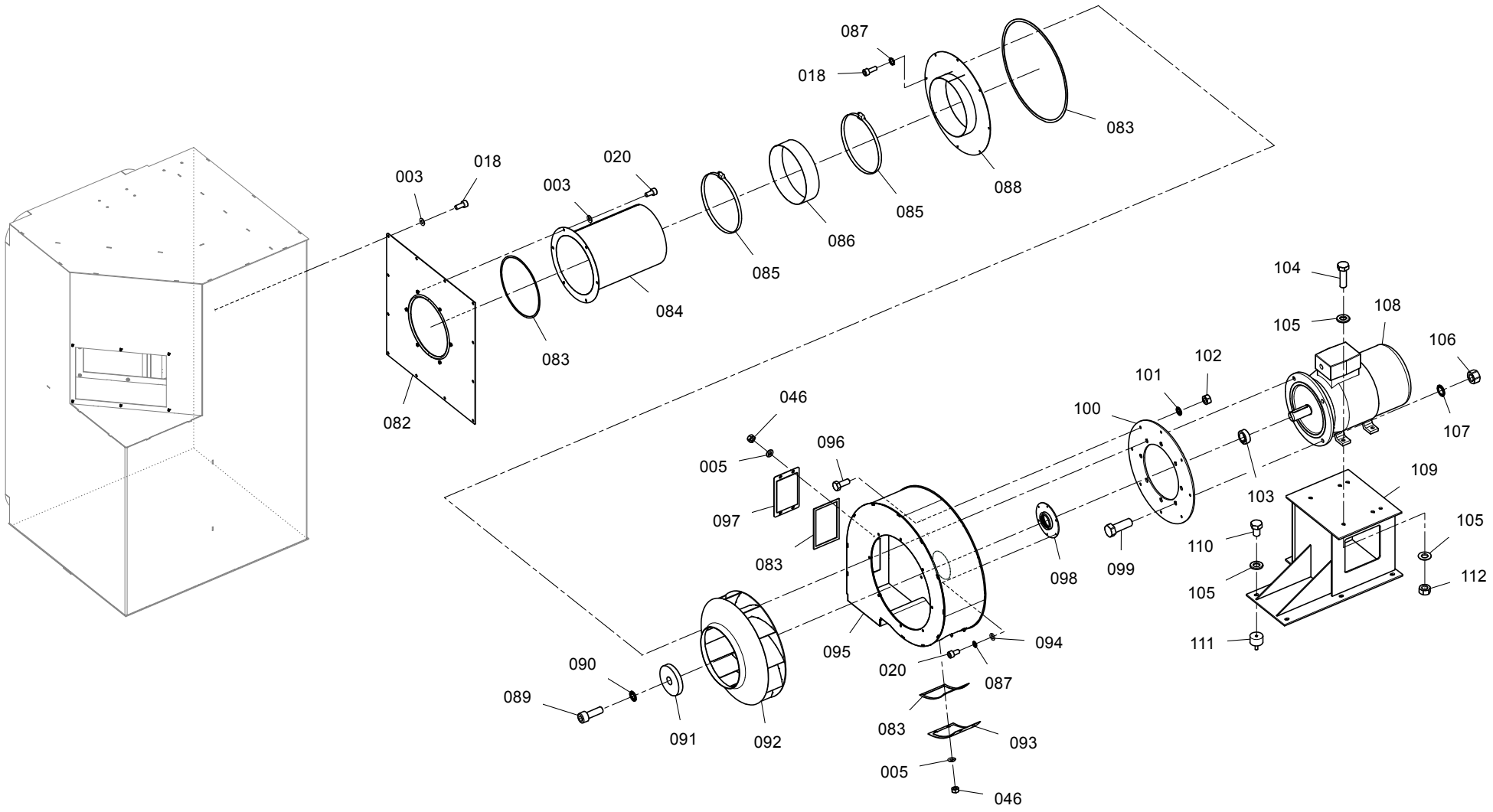

21520

RXX_2_15_20_301.cgm

Catalogue no. Katalog-Nr.	Part No. Material-Nr.	Part description en	Material-Bezeichnung de	Comment Bemerkung
21520.106	10431841	Hexagon nut M12-8	6kt-Mutter M12-8	
21520.107	10356695	Locking washer 13/18	Sicherungsscheibe 13/18	
21520.108	10842307	Motor waste fan B35T 7.5KW IE3	Motor Abgangventilator B35T 7.5KW IE3	
21520.108	10842309	Motor waste B35T 11kw IE3	Motor Abgang B35T 11kw IE3	
21520.109	10942295	Console welded	Konsole geschweisst	
21520.110	10243710	Hex. screw M10x16	6kt-Schraube M10x16	
21520.111	10532300	Rubber buffer 50x30-55 ShA	Gummipuffer 50x30-55 ShA	
21520.112	10431840	Hexagon nut M10-8	6kt-Mutter M10-8	

R 36

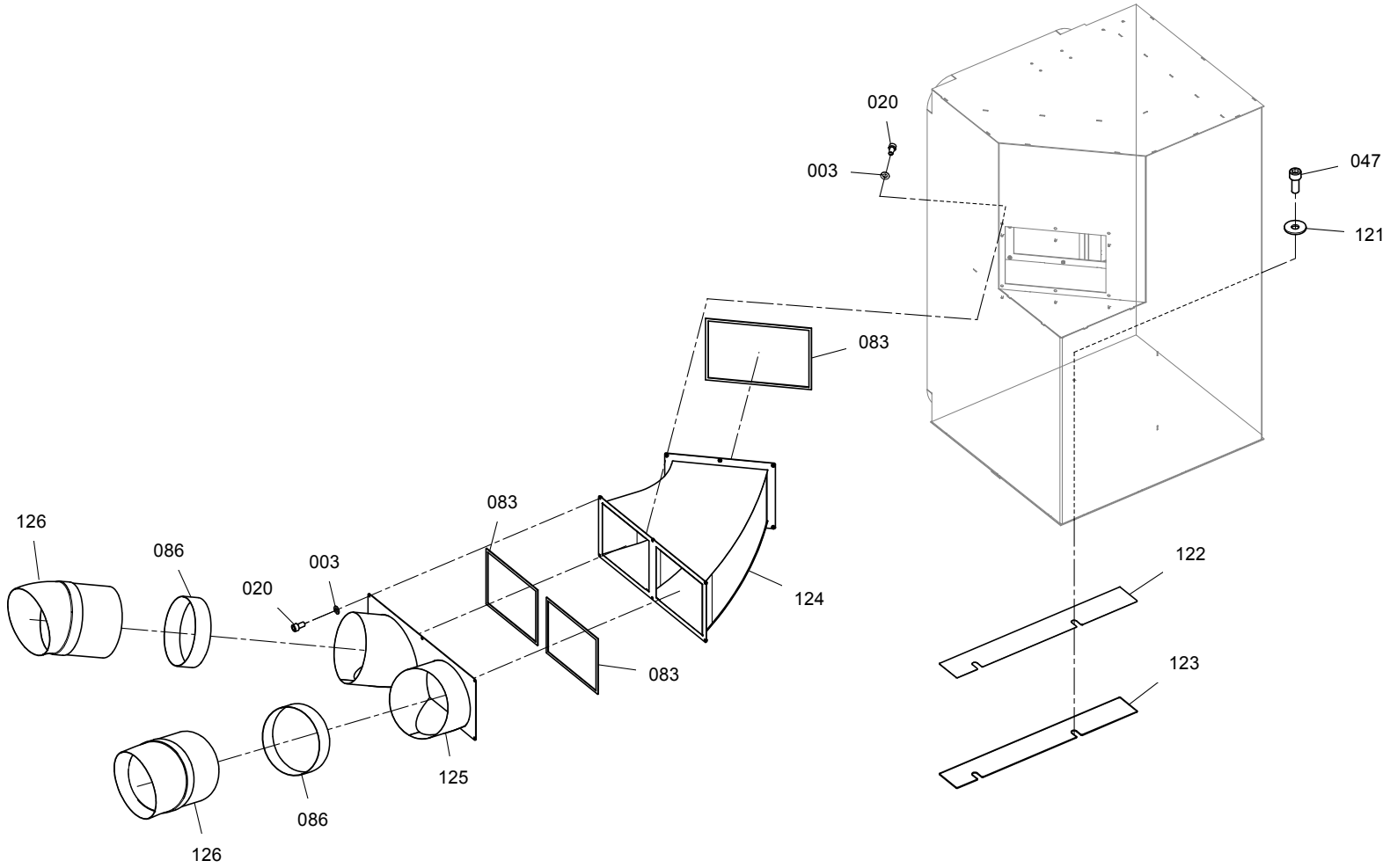

21520

RXX_2_15_20_401.cgm

Catalogue no. Katalog-Nr.	Part No. Material-Nr.	Part description en	Material-Bezeichnung de	Comment Bemerkung
21520.003	10354210	Washer 6.4-St-140HV	Scheibe 6.4-St-140HV	
21520.020	10258924	Cyl.screw M6x12	Zyl.Schraube M6x12	
21520.047	10241974	Cyl.screw M10x25	Zyl.Schraube M10x25	
21520.083	10632942	Plastic foam AU-9x3	Schaumstoff AU-9x3	
21520.086	10791799	Hose di220x2x80-EPDM	Schlauch di220x2x80-EPDM	
21520.121	10356624	Washer 10.5-St-100HV	Scheibe 10.5-St-100HV	
21520.122	10963496	Washer 1.5mm	Scheibe 1.5mm	
21520.123	10963426	Washer 3mm	Scheibe 3mm	
21520.124	10963290	Channel	Kanal	
21520.125	10960756	Flange welded	Flansch geschweisst	
21520.126	10971512	Pipe complete D250	Rohr komplett D250	

R 36

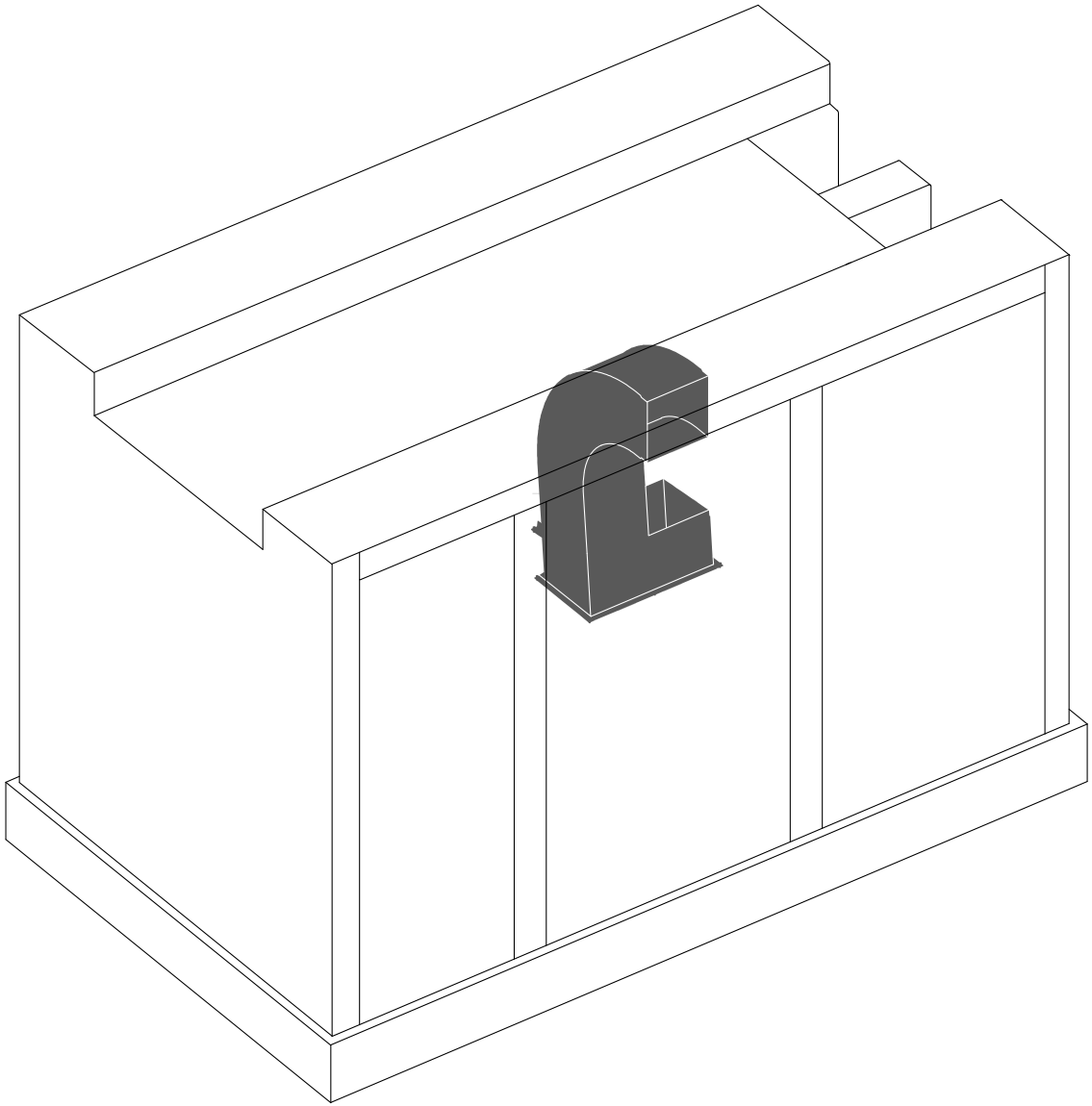

21550

Navi_2_15_50_B01.cgm

R 36

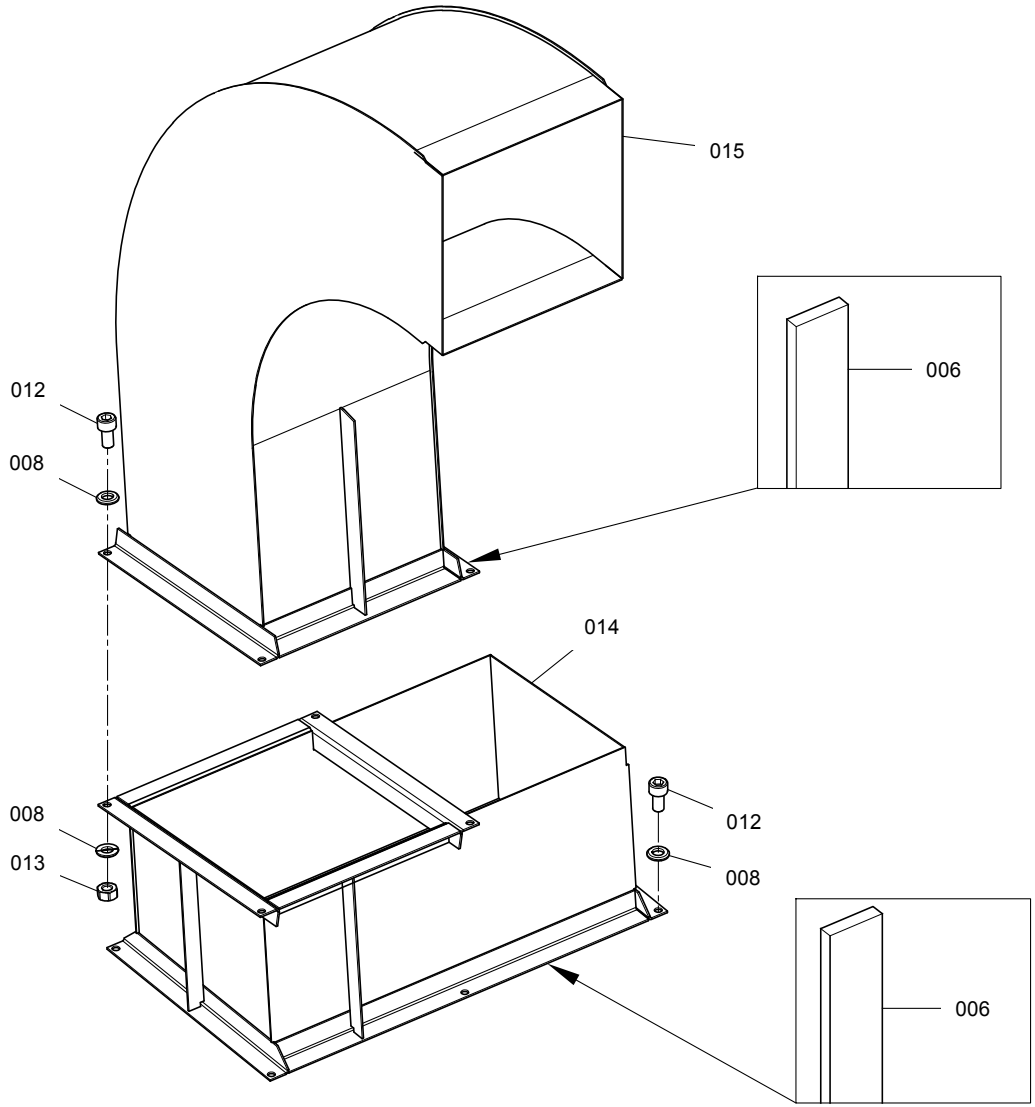

21550

RXX_2_15_50_B101.cgm

Catalogue no. Katalog-Nr.	Part No. Material-Nr.	Part description en	Material-Bezeichnung de	Comment Bemerkung
21550.006	10632942	Plastic foam AU-9x3	Schaumstoff AU-9x3	
21550.008	10354210	Washer 6.4-St-140HV	Scheibe 6.4-St-140HV	
21550.012	10258924	Cyl.screw M6x12	Zyl.Schraube M6x12	
21550.013	10431759	Hexagon nut M6-8	6kt-Mutter M6-8	
21550.014	10946754	Middle piece	Mittelst?ck	
21550.014	10947618	Middle piece transport	Mittelst?ck Transport	
21550.015	10947088	Channel fan (600)	Kanal Ventilator (600)	
21550.015	10947199	Channel fan	Kanal Ventilator	

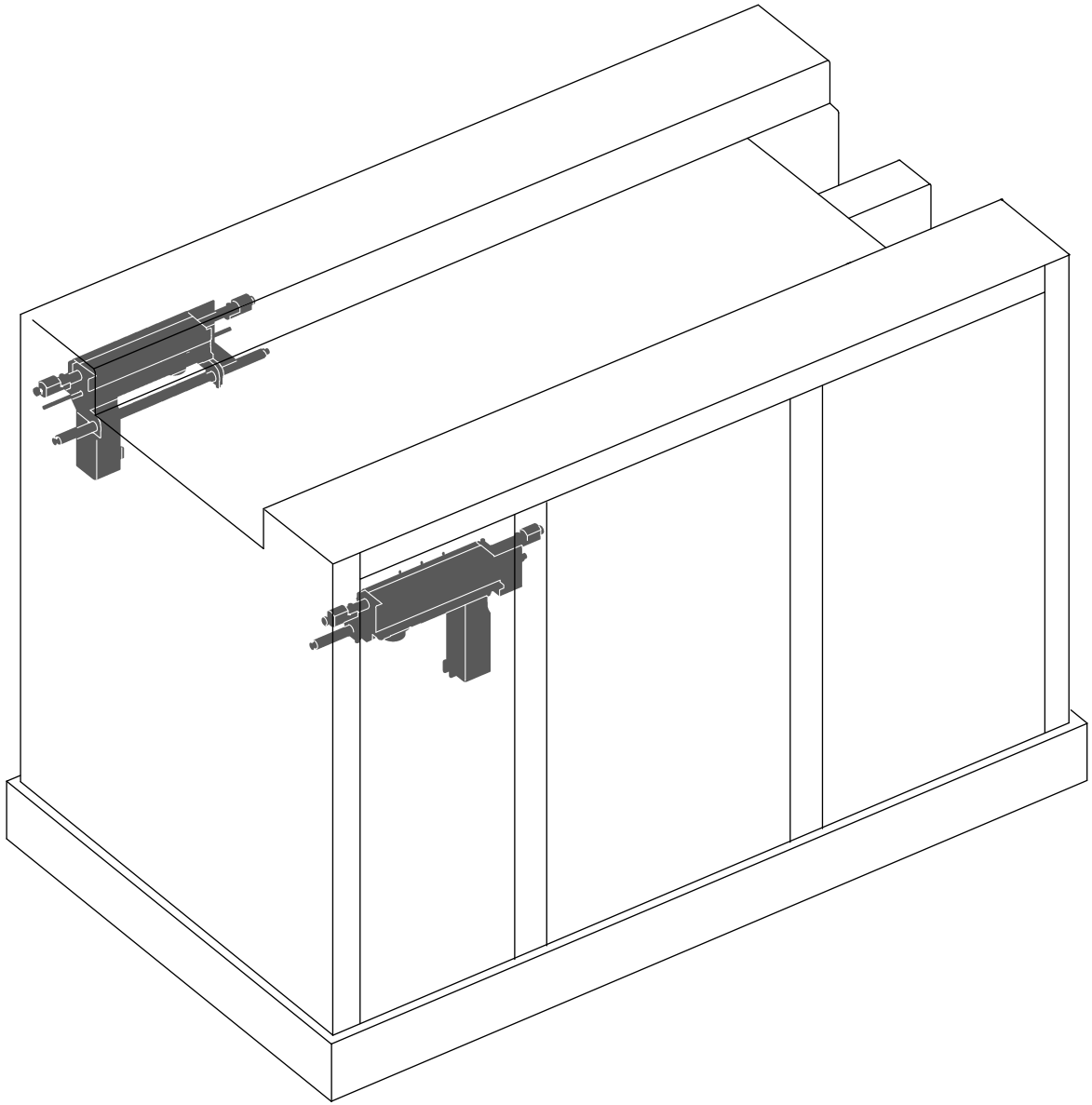

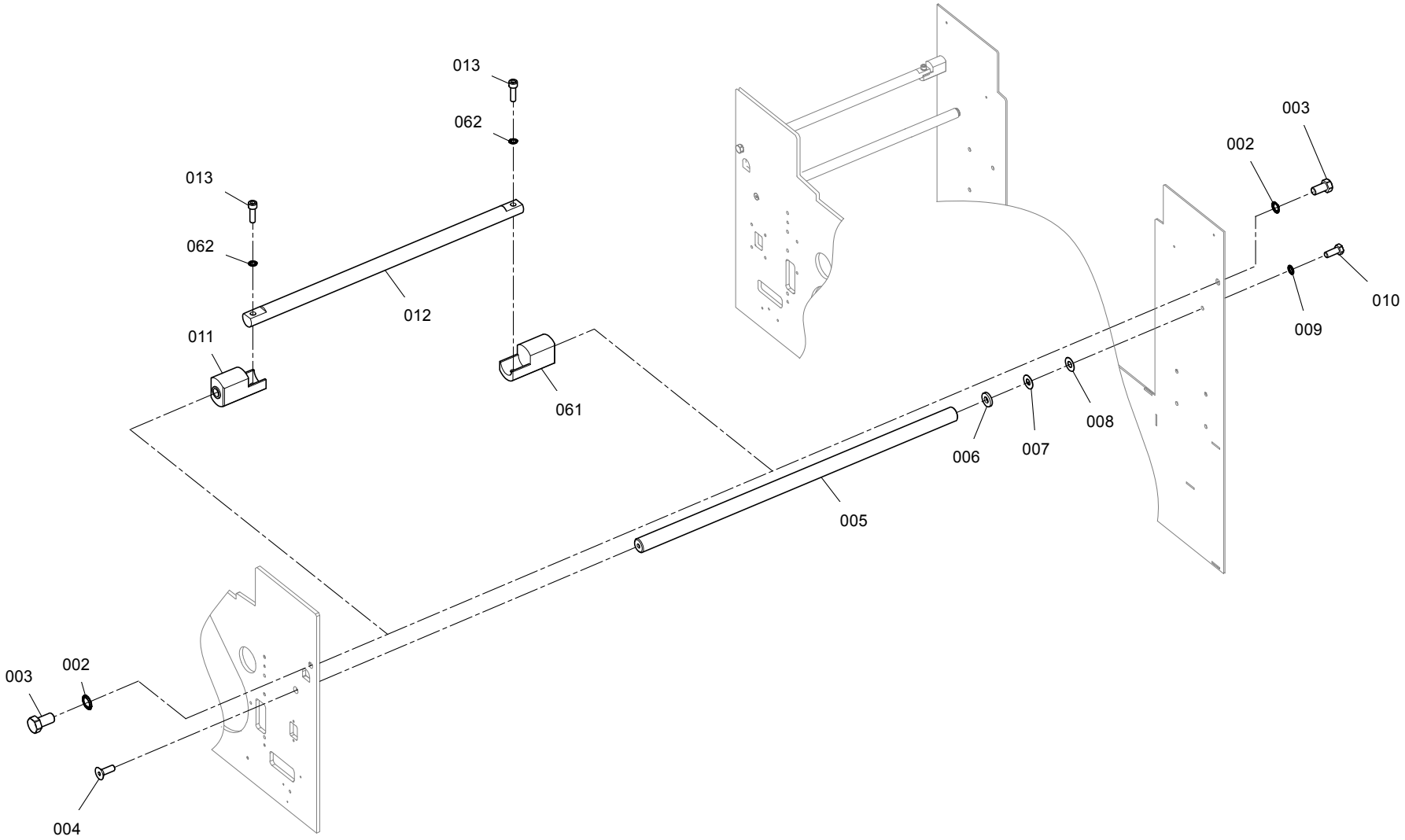

RXX_2_20_101.cgm

Catalogue no. Katalog-Nr.	Part No. Material-Nr.	Part description en	Material-Bezeichnung de	Comment Bemerkung
220.002	10483783	Locking washer 17/24	Sicherungsscheibe 17/24	
220.003	10259104	Hex. screw M16x25	6kt-Schraube M16x25	
220.004	10259333	Socket flat head screw M10x30	Senkschraube M10x30	
220.005	10712197	Holding bar	Haltestange	
220.006	10730955	Distance ring 4	Distanzring 4	
220.007	10730917	Distance ring 1	Distanzring 1	
220.008	10530939	Distance ring 0.5	Distanzring 0.5	
220.009	10259423	Locking washer 10.5/16	Sicherungsscheibe 10.5/16	
220.010	10259092	Hex. screw M10x25	6kt-Schraube M10x25	
220.011	10687493	Holder	Halter	
220.012	10712223	Rod top	Stange oben	
220.013	10258967	Cyl.screw M10x35	Zyl.Schraube M10x35	
220.061	10766803	Holder end	Halter Ende	
220.062	10259662	Locking washer 10.5/16	Sicherungsscheibe 10.5/16	

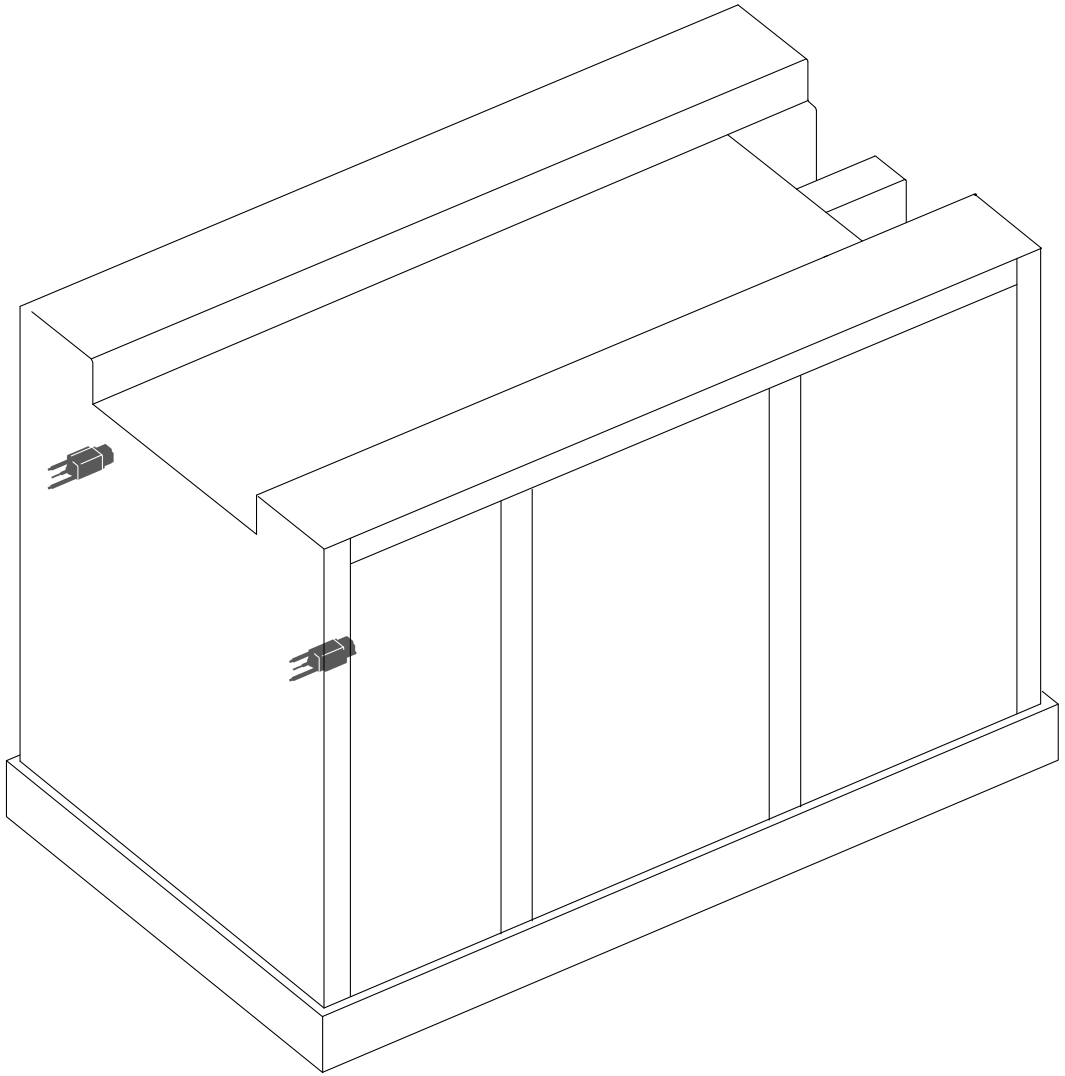

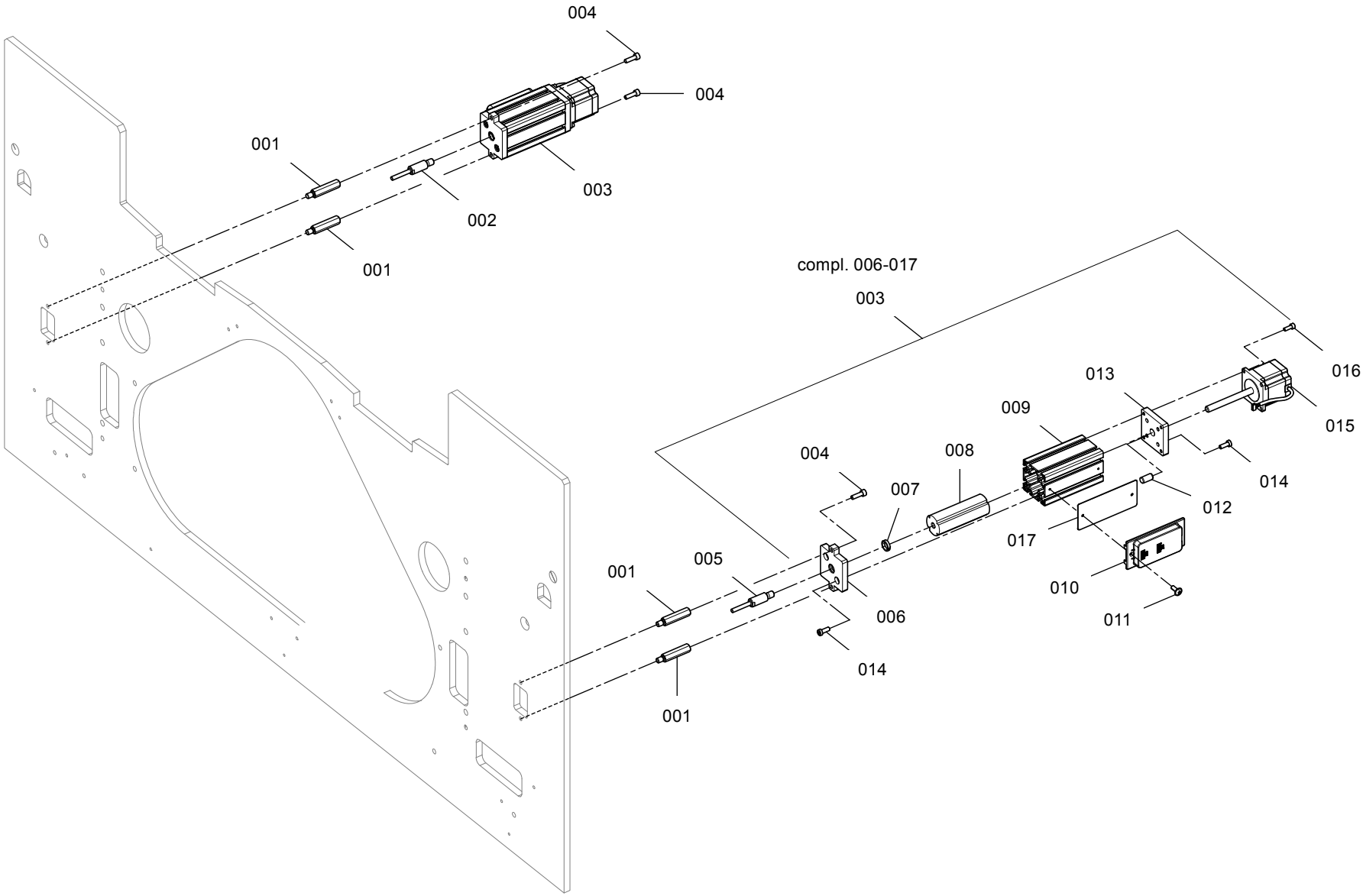

RXX_2_25_102.cgm

Catalogue no. Katalog-Nr.	Part No. Material-Nr.	Part description en	Material-Bezeichnung de	Comment Bemerkung
225.001	10960147	Supporting rod	Abst?tzstange	
225.002	10959016	Reduction right	Reduktion rechts	
225.003	10958916	Traversing drive below	Changierantrieb unten	
225.004	10259461	Cyl.screw M6x20	Zyl.Schraube M6x20	
225.005	10969013	Reduction left	Reduktion links	
225.006	10958980	Front plate	Frontplatte	
225.007	10961047	Sealing segment	Abdichtsegment	
225.008	10958899	Nut	Mutter	
225.009	10958893	Profile	Profil	
225.010	10960839	Plastic cover electronic	Kunststoffh?lle Elektronik	
225.011	10811122	Oval head screw flange M3x8	Linsenschraube Flansch M3x8	
225.012	10354841	Cylindrical pin 5m6x10	Zylinderstift 5m6x10	
225.013	10958923	Plate motor	Platte Motor	
225.014	10255578	Cyl.screw M6x16	Zyl.Schraube M6x16	
225.015	10959981	Step motor	Schrittmotor	
225.016	10259595	Cyl.screw M5x14	Zyl.Schraube M5x14	
225.017	11036401	Compensating piece	Ausgleichsst?ck	

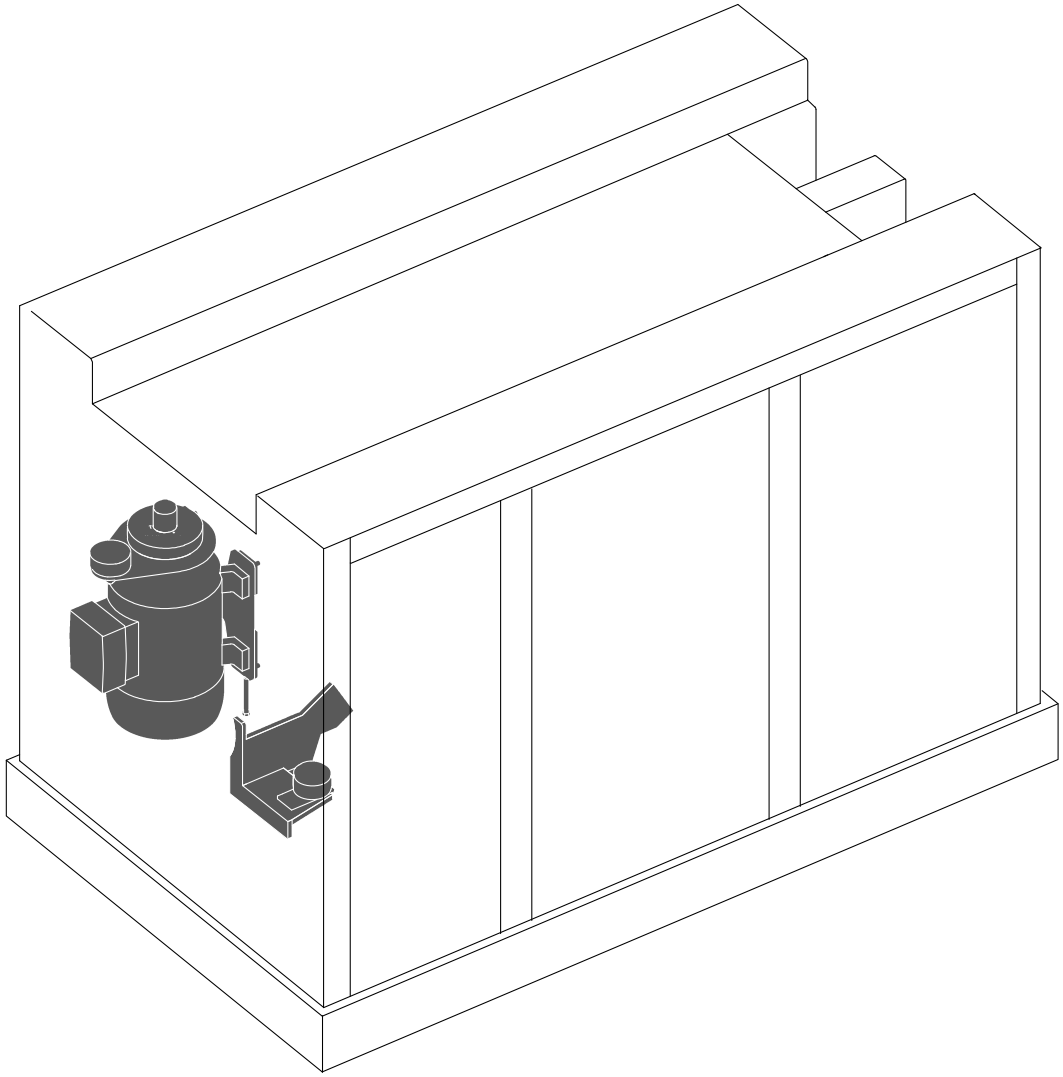

Navi_2_35_01.cgm

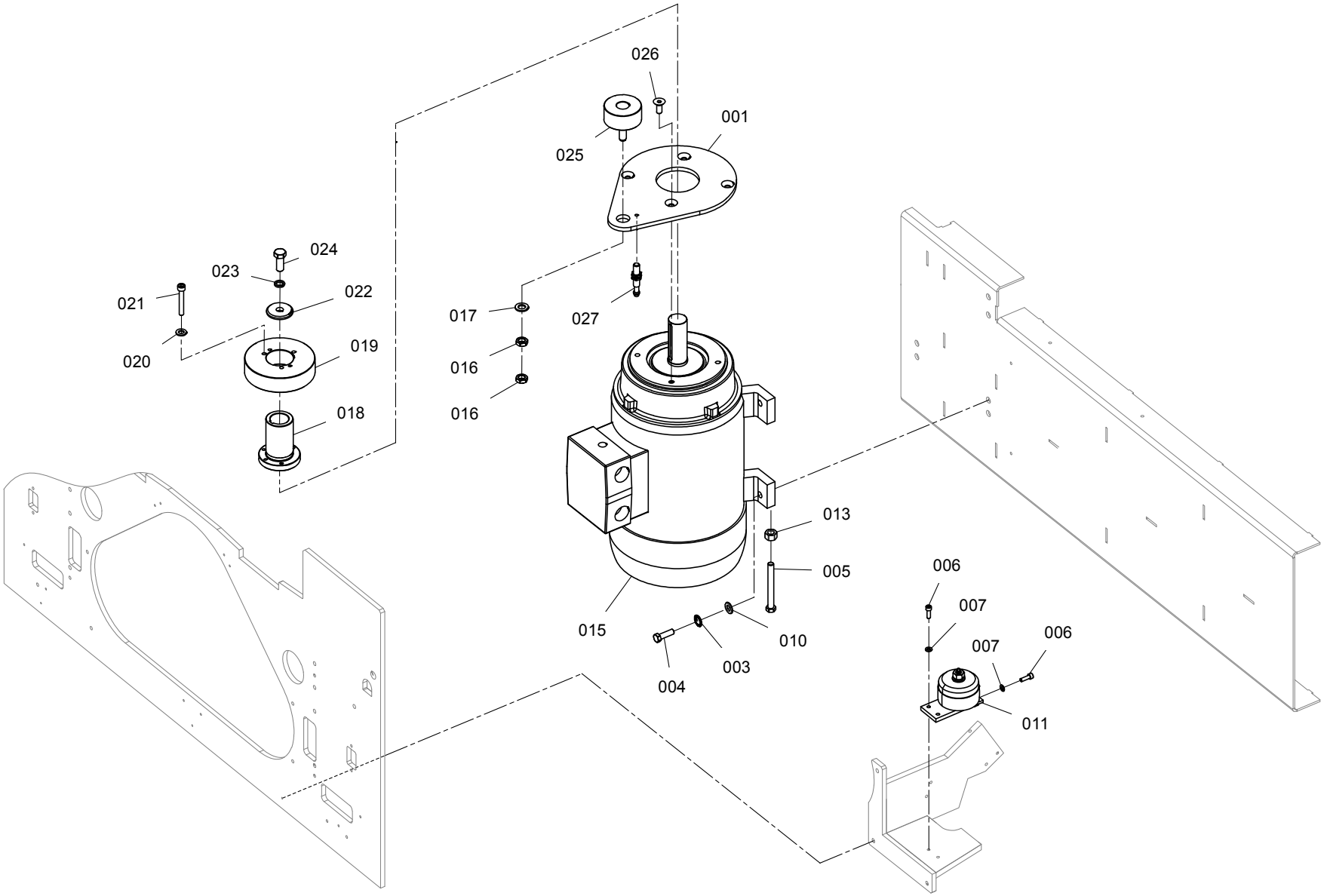

RXX_2_35_A101.cgm

Catalogue no. Katalog-Nr.	Part No. Material-Nr.	Part description en	Material-Bezeichnung de	Comment Bemerkung
235.001	10957849	Console pulley	Konsole Riemenscheibe	
235.003	10483782	Locking washer 13/18	Sicherungsscheibe 13/18	
235.004	10259190	Hex. screw M12x45	6kt-Schraube M12x45	
235.005	10259191	Hex. screw M12x110	6kt-Schraube M12x110	
235.006	10258949	Cyl.screw M8x25	Zyl.Schraube M8x25	
235.007	10478061	Washer 8.4-St-200HV	Scheibe 8.4-St-200HV	
235.010	10455614	Washer 13-St-200HV	Scheibe 13-St-200HV	
235.011	U90310139	Pulley complete VLT 139	Riemenscheibe komplett VLT 139	
235.013	10431841	Hexagon nut M12-8	6kt-Mutter M12-8	
235.015	10842289	Motor B34T 18.5KW IE3	Motor B34T 18.5KW IE3	
235.016	10480945	Hexagon nut M16x1.5-04	6kt-Mutter M16x1.5-04	
235.017	10478064	Washer 17-St-200HV	Scheibe 17-St-200HV	
235.018	10759025	Clamping hub CR 48	Klemmnabe CR 48	
235.019	10938772	Pulley 7,5/50Hz 9/60Hz R35 V2	Riemenscheibe 7,5/50Hz 9/60Hz R35 V2	
235.019	10938773	Pulley 8/50Hz 9,5/60Hz R35 V2	Riemenscheibe 8/50Hz 9,5/60Hz R35 V2	
235.019	10938782	Pulley 7/50Hz 8,5/60Hz R35 V2	Riemenscheibe 7/50Hz 8,5/60Hz R35 V2	
235.019	10938785	Pulley 8,5/50Hz R35 V2	Riemenscheibe 8,5/50Hz R35 V2	
235.019	10938786	Pulley 9/50Hz R35 V2	Riemenscheibe 9/50Hz R35 V2	
235.019	10938787	Pulley 9,5/50Hz R35 V2	Riemenscheibe 9,5/50Hz R35 V2	
235.019	10938788	Pulley 10/50Hz R35 V2	Riemenscheibe 10/50Hz R35 V2	
235.020	10259660	Locking washer 8.4/13	Sicherungsscheibe 8.4/13	
235.021	10504736	Cyl.screw M8x55	Zyl.Schraube M8x55	
235.022	10764967	Washer 48	Scheibe 48	
235.023	10483783	Locking washer 17/24	Sicherungsscheibe 17/24	
235.024	10243642	Hex. screw M16x40	6kt-Schraube M16x40	
235.025	10950466	Measuring bolt pulley V2	Messbolzen Riemenscheibe V2	
235.026	10160838	Socket flat head screw M12x30	Senkschraube M12x30	
235.027	10530381	Initiator IME08-1B5PSZT0S DC10-30V	Initiator IME08-1B5PSZT0S DC10-30V	

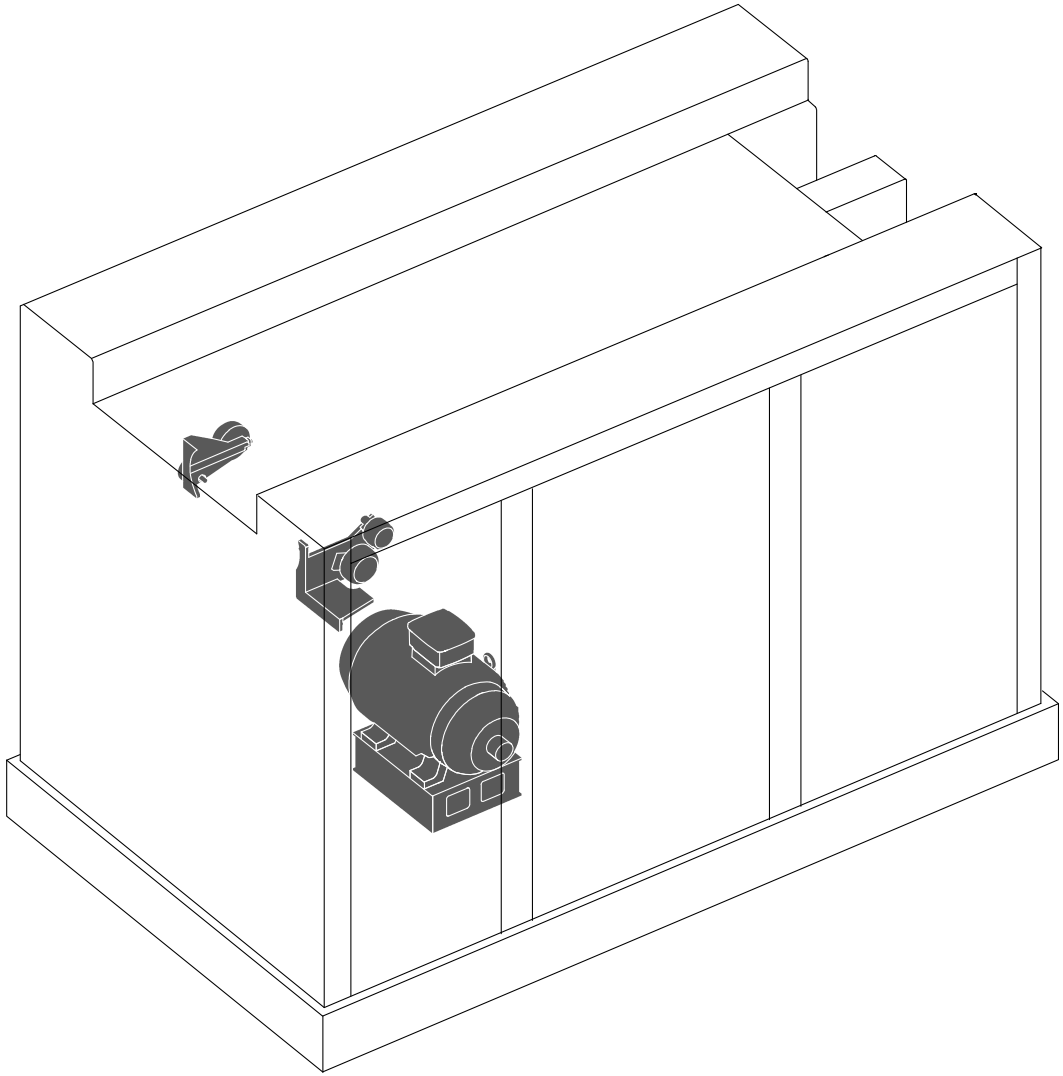

Navi_2_37_01.cgm

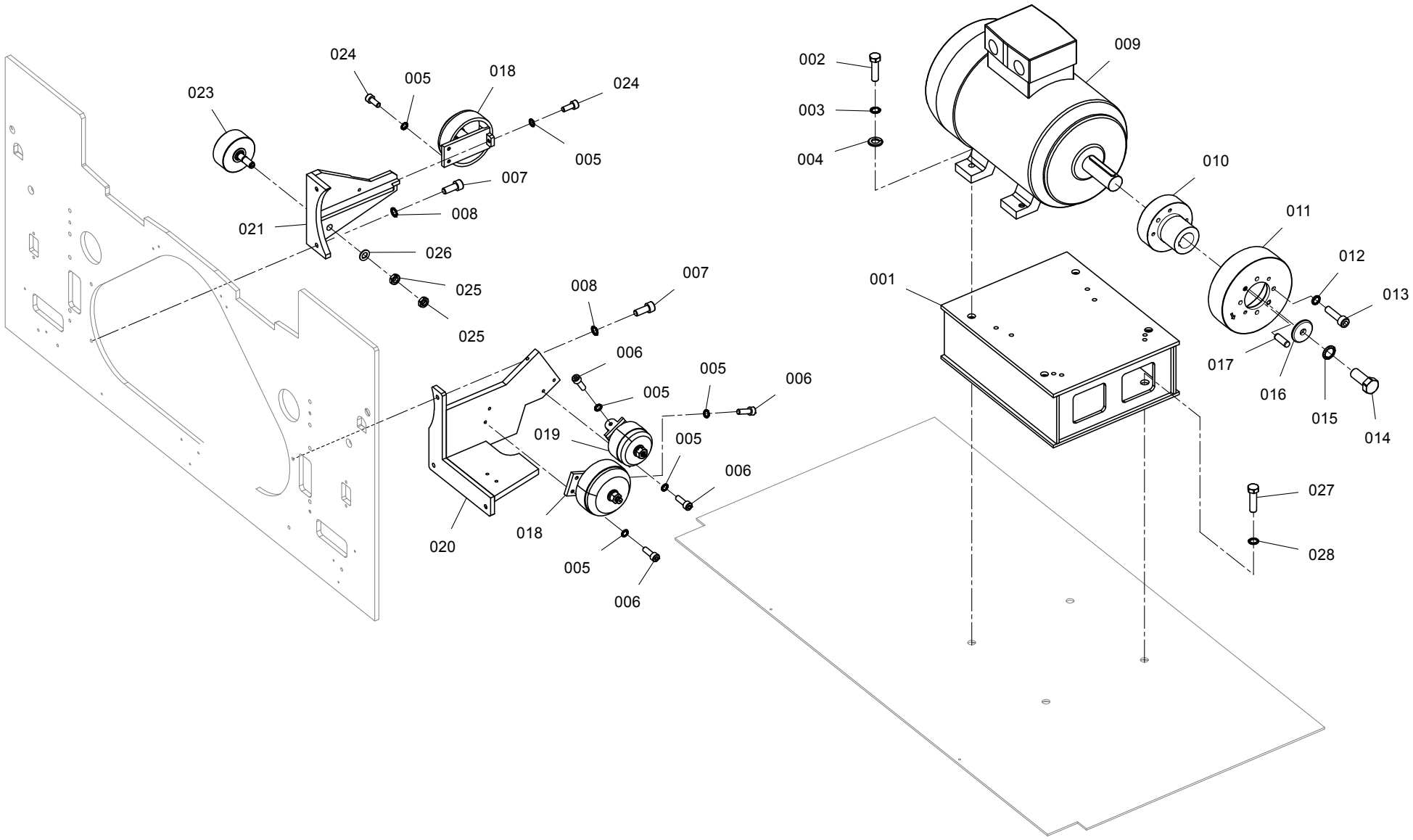

RXX_2_37_101.cgm

Catalogue no. Katalog-Nr.	Part No. Material-Nr.	Part description en	Material-Bezeichnung de	Comment Bemerkung
237.001	10932859	Motor mounting plate rotor	Motorkonsole Rotor	
237.002	10259190	Hex. screw M12x45	6kt-Schraube M12x45	
237.003	10483782	Locking washer 13/18	Sicherungsscheibe 13/18	
237.004	10455614	Washer 13-St-200HV	Scheibe 13-St-200HV	
237.005	10259660	Locking washer 8.4/13	Sicherungsscheibe 8.4/13	
237.006	10258949	Cyl.screw M8x25	Zyl.Schraube M8x25	
237.007	10241974	Cyl.screw M10x25	Zyl.Schraube M10x25	
237.008	10259423	Locking washer 10.5/16	Sicherungsscheibe 10.5/16	
237.009	10842287	Motor rotor B3T 22KW IE3	Motor Rotor B3T 22KW IE3	
237.010	10758761	Hub rotor D48	Nabe Rotor D48	
237.011	10735267	Pulley D212	Riemenscheibe D212	
237.012	10259423	Locking washer 10.5/16	Sicherungsscheibe 10.5/16	
237.013	10258966	Cyl.screw M10x30	Zyl.Schraube M10x30	
237.014	10243642	Hex. screw M16x40	6kt-Schraube M16x40	
237.015	10483783	Locking washer 17/24	Sicherungsscheibe 17/24	
237.016	10764967	Washer 48	Scheibe 48	
237.017	10356629	Cylindrical pin 10m6x30	Zylinderstift 10m6x30	
237.018	U90310136	Rotor pulley VLT 080	Rotor Riemenscheibe VLT 080	
237.019	U90310139	Pulley complete VLT 139	Riemenscheibe komplett VLT 139	
237.020	11044420	Console welded	Konsole geschweisst	
237.021	10952841	Holder machined	Halter bearbeitet	
237.023	UE3022921	Guiding roller	F?hrungsrolle	
237.024	10258948	Cyl.screw M8x20	Zyl.Schraube M8x20	
237.025	10480945	Hexagon nut M16x1.5-04	6kt-Mutter M16x1.5-04	
237.026	10478064	Washer 17-St-200HV	Scheibe 17-St-200HV	
237.027	10259106	Hex. screw M16x45	6kt-Schraube M16x45	
237.028	10531290	Locking washer 17/24	Sicherungsscheibe 17/24	

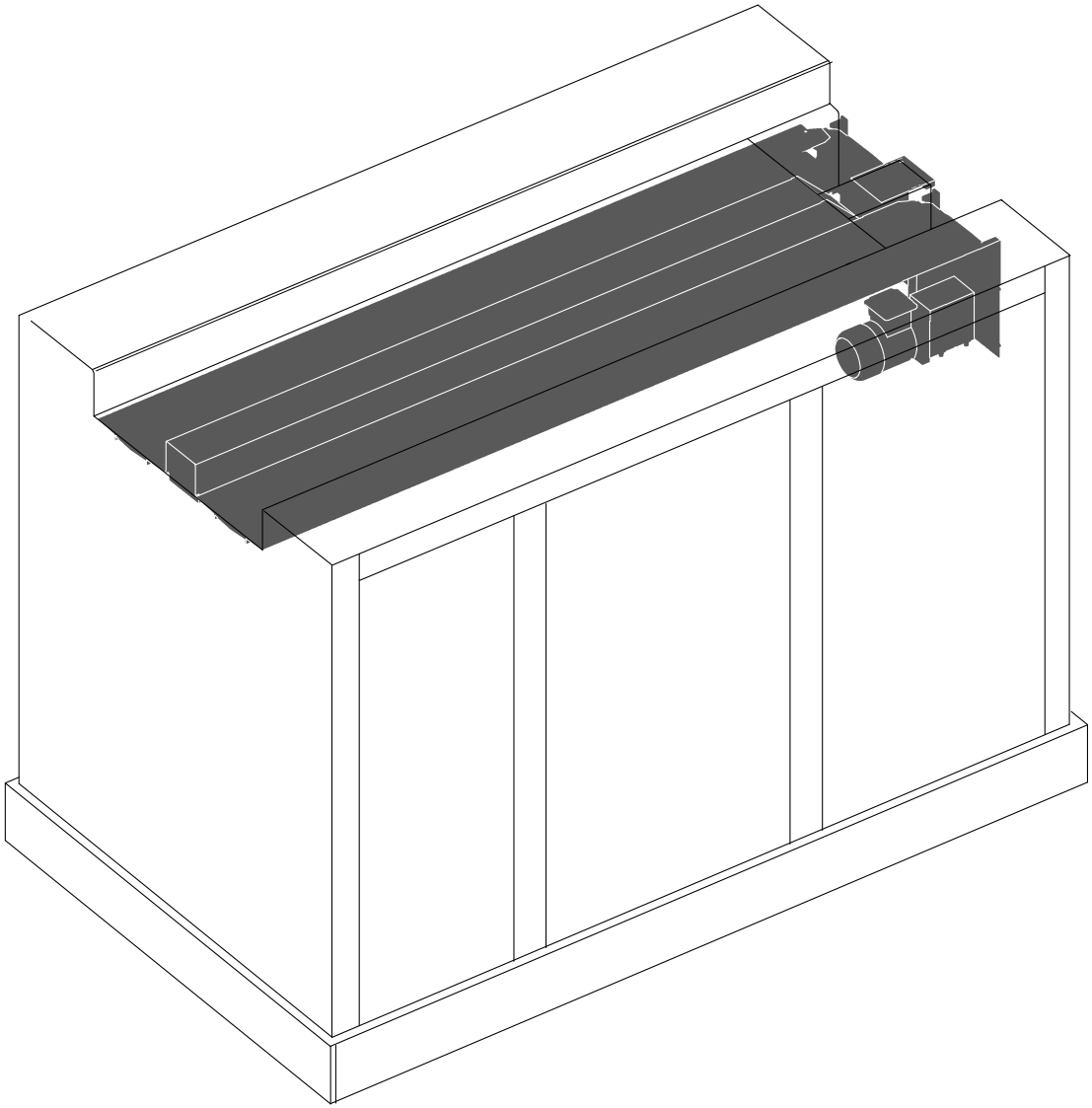

Navi_2_45_01.cgm

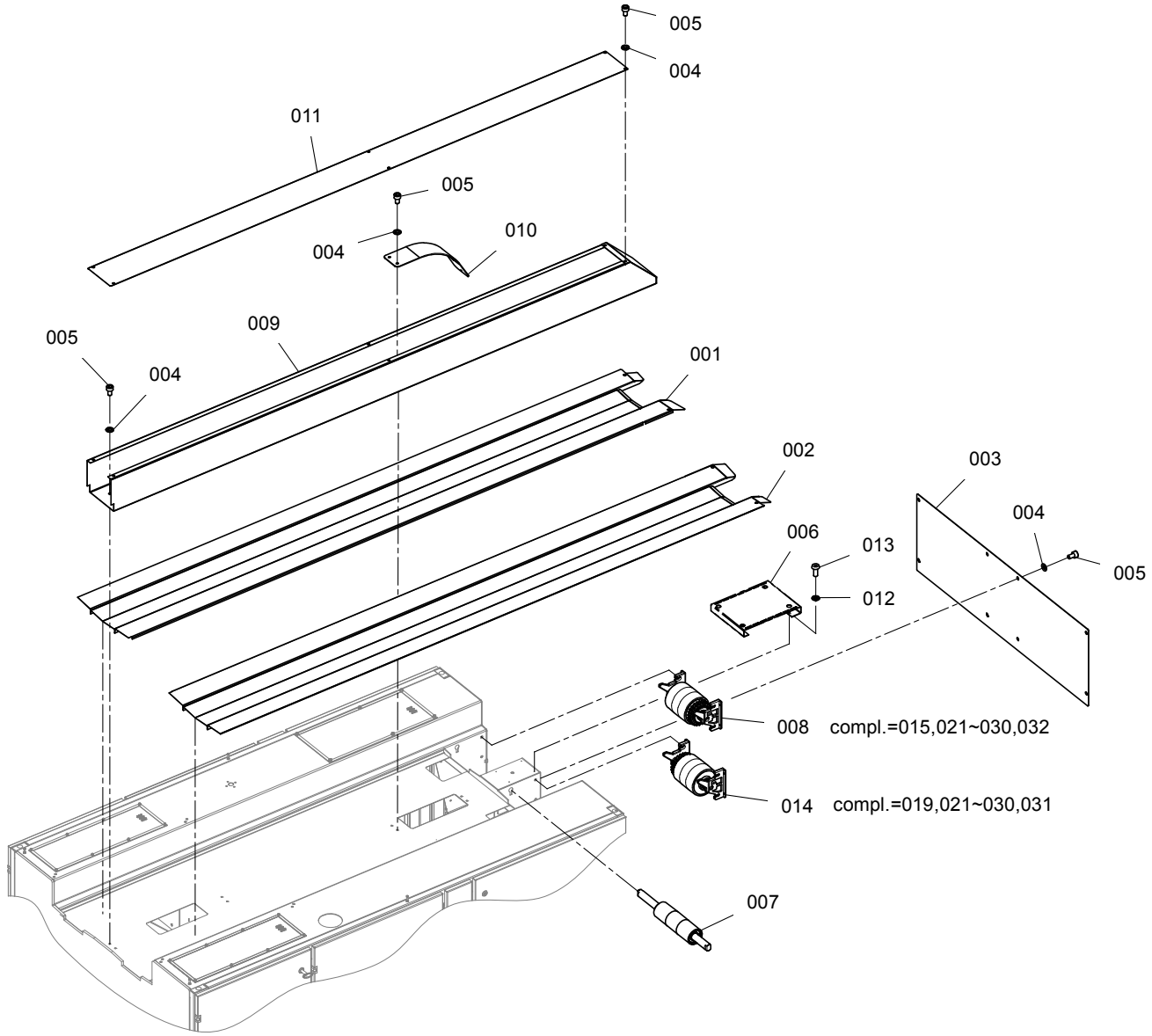
005
004
011
005
010
004
009
005
004
001
002
003
004
006
013
005
012
008 compl.=015,021~030,032
014 compl.=019,021~030,031
007

Catalogue no. Katalog-Nr.	Part No. Material-Nr.	Part description en	Material-Bezeichnung de	Comment Bemerkung
245.001	10933828	Rest welded L	St?tze geschweisst L	
245.002	10933911	Rest welded R	St?tze geschweisst R	
245.003	10920700	Covering	Verkleidung	
245.004	10354210	Washer 6.4-St-140HV	Scheibe 6.4-St-140HV	
245.005	10258830	Cyl.screw M6x10	Zyl.Schraube M6x10	
245.006	10920759	Cover	Abdeckung	
245.007	UE3165701	Deflection cylinder	Umlenkwalze	
245.008	10759581	Drum gear drive L	Trommel Antrieb L	
245.009	10920761	Cable duct	Kabelkanal	
245.010	10722087	Cable duct 1	Kabelkanal 1	
245.011	10920841	Covering cable duct	Verkleidung Kabelkanal	
245.012	10242015	Washer 4.3-St-140HV	Scheibe 4.3-St-140HV	
245.013	10542863	Oval head screw M4x10	Linsenschraube M4x10	
245.014	10759582	Drum gear drive R	Trommel Antrieb R	

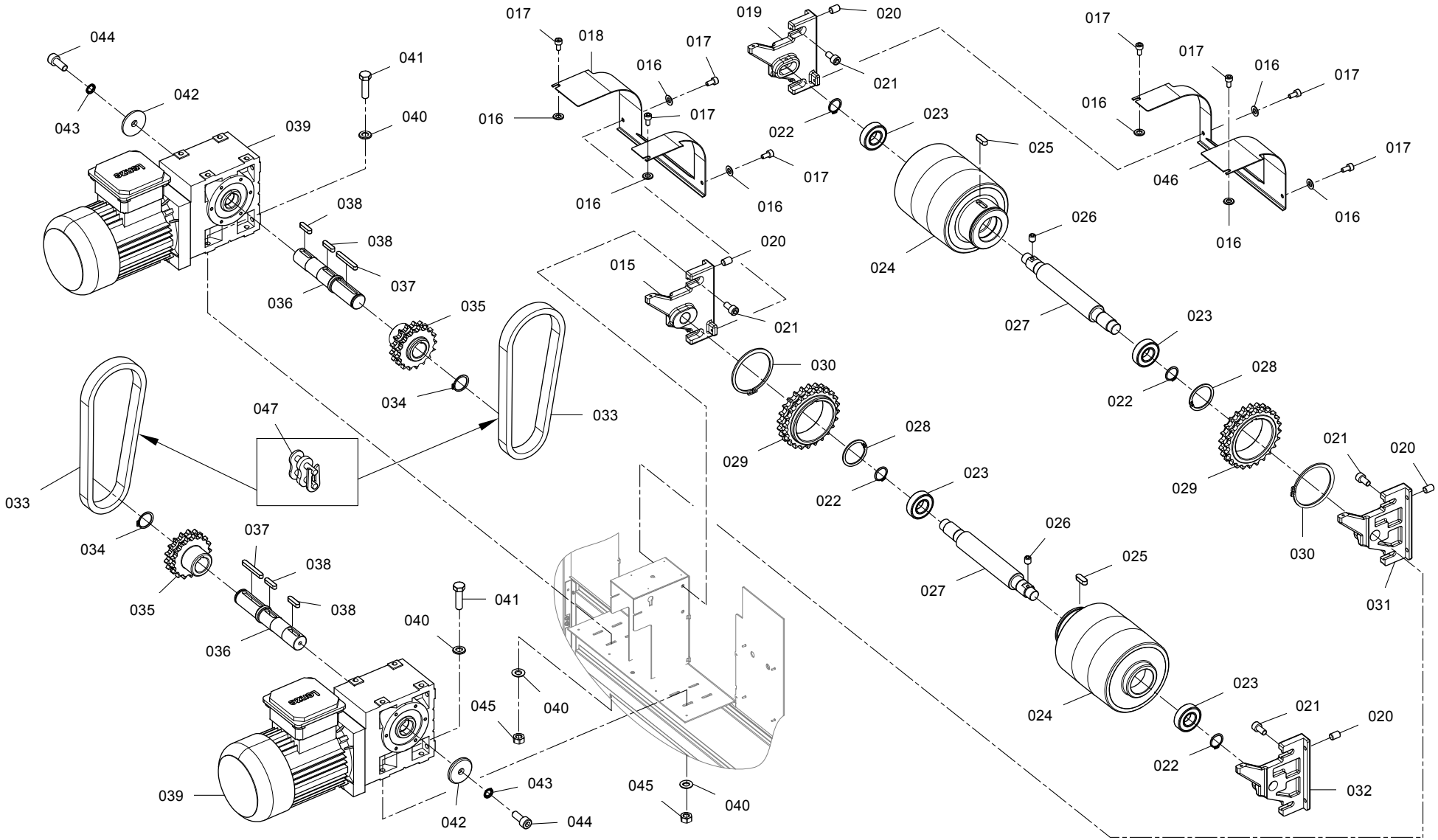

RXX_2_45_201.cgm

Catalogue no. Katalog-Nr.	Part No. Material-Nr.	Part description en	Material-Bezeichnung de	Comment Bemerkung
245.015	10725299	Holder right	Halter rechts	
245.016	10245275	Washer 5.3-St-140HV	Scheibe 5.3-St-140HV	
245.017	10258829	Cyl.screw M5x10	Zyl.Schraube M5x10	
245.018	10761771	Cover welded R	Abdeckung geschweisst R	
245.019	10725335	Holder right	Halter rechts	
245.020	10259223	Threaded pin M8x12-45H	Gewindestift M8x12-45H	
245.021	10241973	Cyl.screw M10x20	Zyl.Schraube M10x20	
245.022	10259649	Locking ring 25x1.2	Sicherungsring 25x1.2	
245.023	104041	Deep-groove ball bearing 25/52x15-6205-2	Ri.Kugellager 25/52x15-6205-2Z	
245.024	UE3060012	Roller	Walze	
245.025	10370343	Parallel key 10x8x28-C45+C	Passfeder 10x8x28-C45+C	
245.026	10259284	Threaded pin M6x8-45H	Gewindestift M6x8-45H	
245.027	UE3065452	Shaft	Welle	
245.028	10355084	Locking ring 52x2	Sicherungsring 52x2	
245.029	10758494	Toothed chain wheel Z24	Zahnkettenrad Z24	
245.030	10415855	Locking ring 85x3	Sicherungsring 85x3	
245.031	10725334	Holder left	Halter links	
245.032	10725298	Holder left	Halter links	
245.033	10759644	Chain 47 LINKS 10B-2 - ISO 606:1994	Kette 47 LINKS 10B-2 - ISO 606:1994	
245.034	10355058	Locking ring 30x1.5	Sicherungsring 30x1.5	
245.035	10759616	Gearwheel Z17	Zahnrad Z17	
245.036	10433936	Shaft gear	Welle Getriebe	
245.037	10355950	Parallel key 8x7x60-C45+C	Passfeder 8x7x60-C45+C	
245.038	10259336	Parallel key 8x7x32-C45+C	Passfeder 8x7x32-C45+C	
245.039	10686705	Gear drive GSS04-2M HAR 080C32	Antrieb GSS04-2M HAR 080C32	
245.040	10259629	Washer 8.4-St-140HV	Scheibe 8.4-St-140HV	
245.041	10259087	Hex. screw M8x30	6kt-Schraube M8x30	
245.042	10433982	Washer	Scheibe	
245.043	10461551	Locking washer 8.4/13	Sicherungsscheibe 8.4/13	

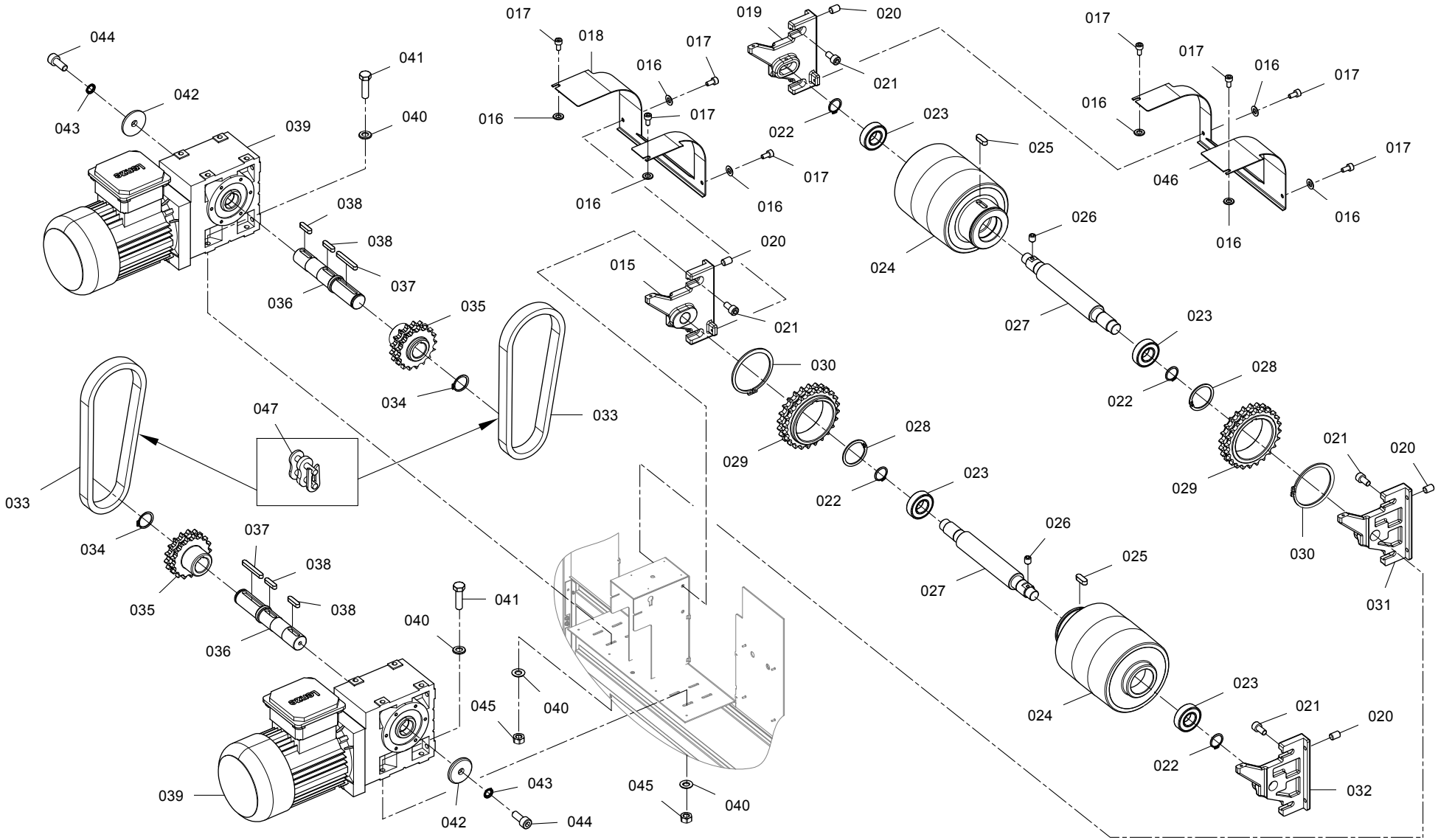

RXX_2_45_201.cgm

Catalogue no. Katalog-Nr.	Part No. Material-Nr.	Part description en	Material-Bezeichnung de	Comment Bemerkung
245.044	10258948	Cyl.screw M8x20	Zyl.Schraube M8x20	
245.045	10259607	Hexagon nut M8-8	6kt-Mutter M8-8	
245.046	10761779	Cover welded L	Abdeckung geschweisst L	
245.047	10759647	Chain link coupling 10B-2, ISO 606:1994	Kettenglied Kupplung 10B-2, ISO 606:1994	

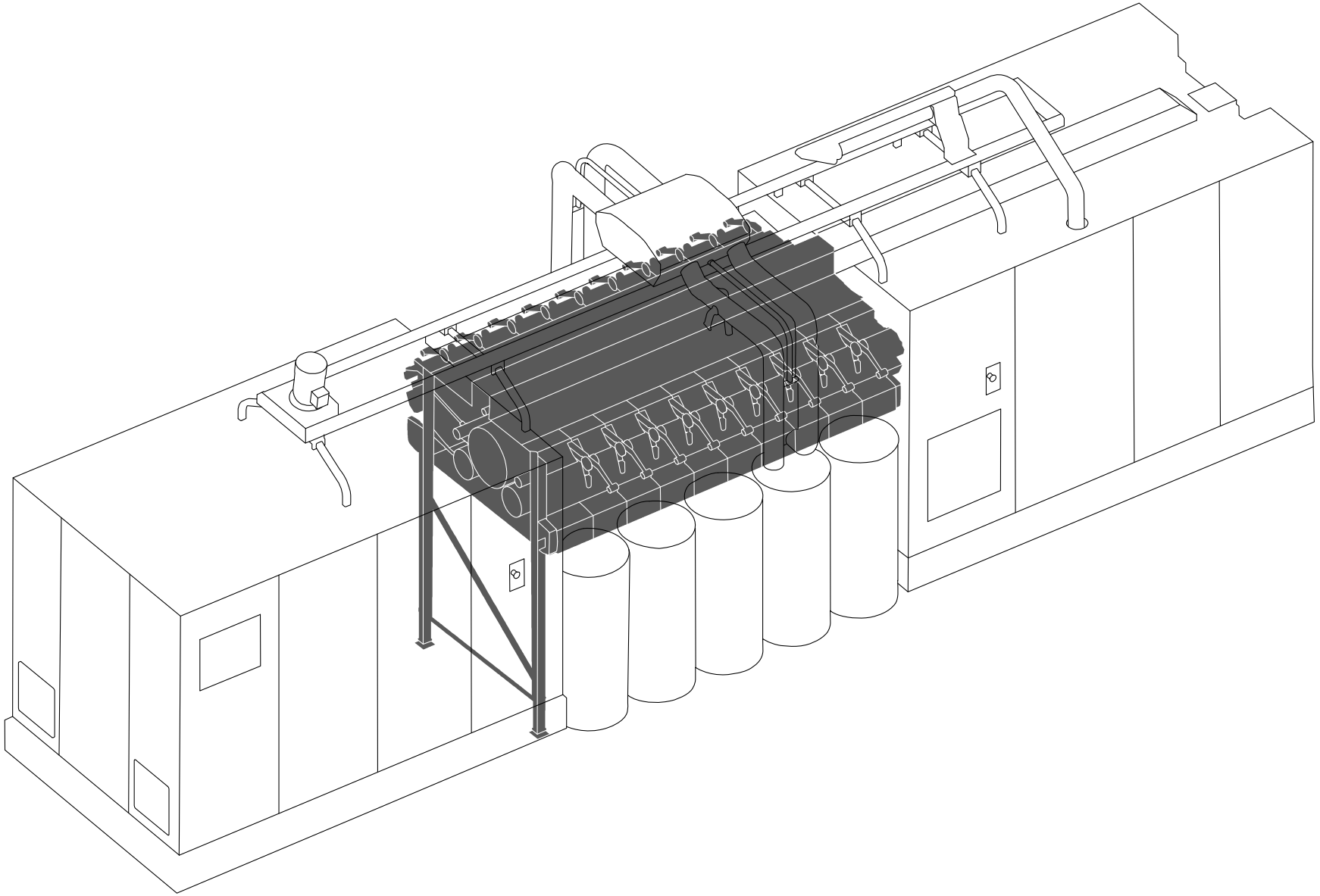

R 36

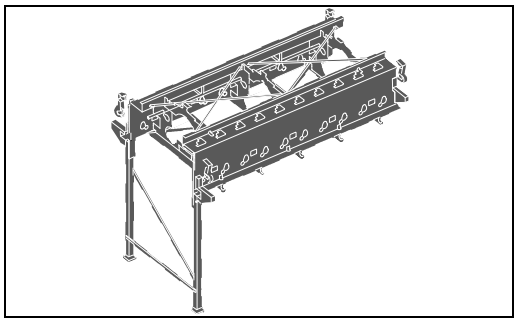

303

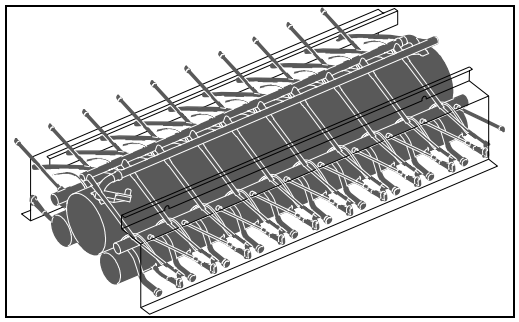

306

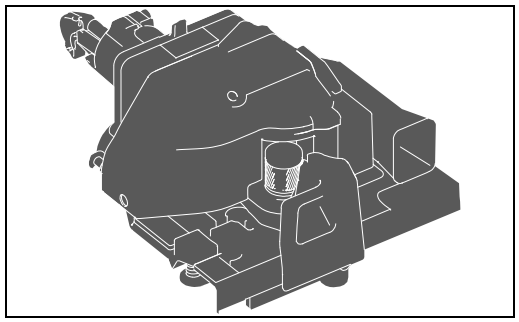

309

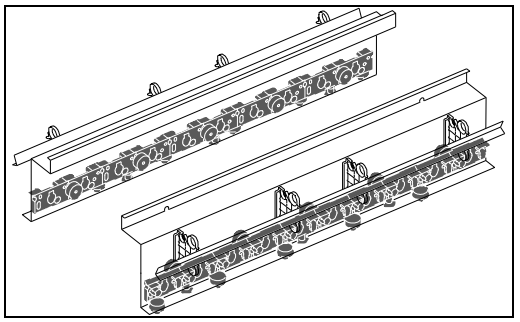

327

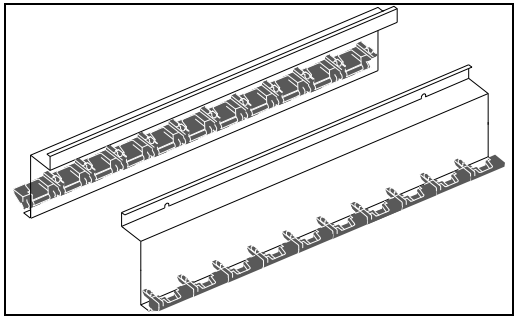

330

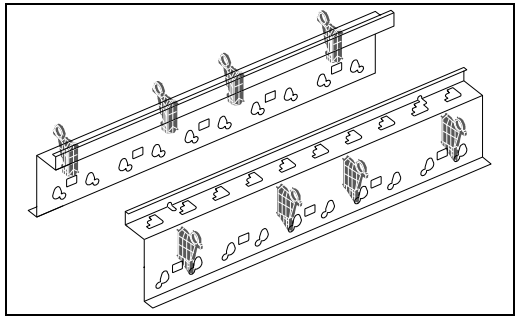

333

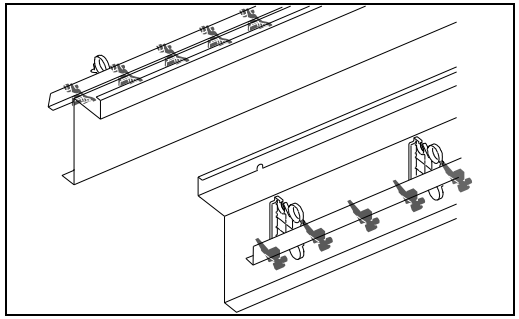

336

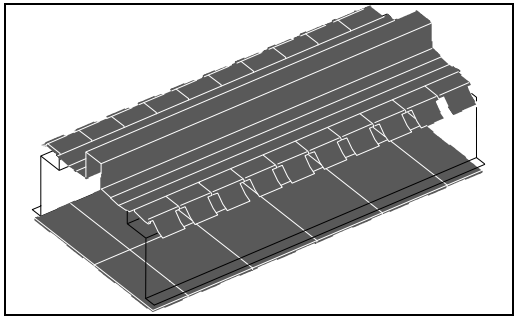

339

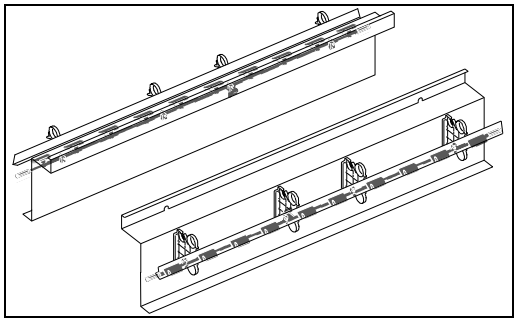

342

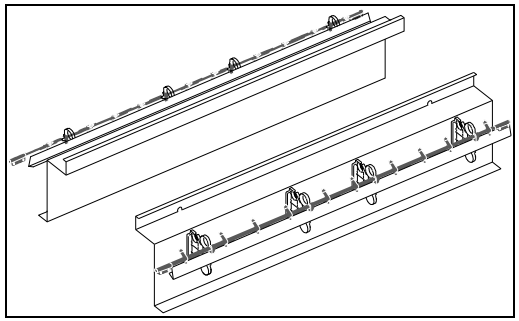

345

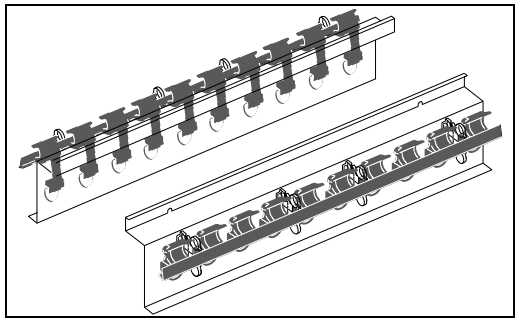

349

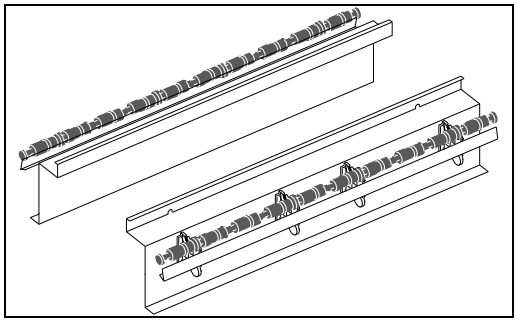

351

R 36

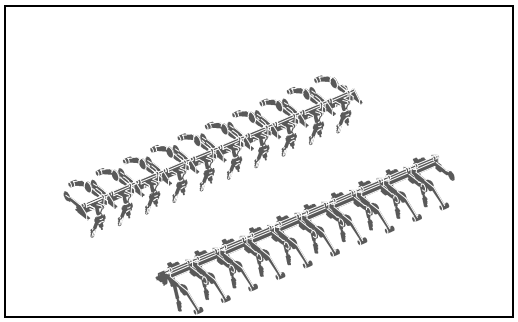

363

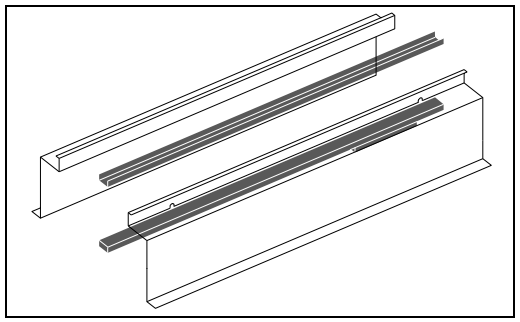

375

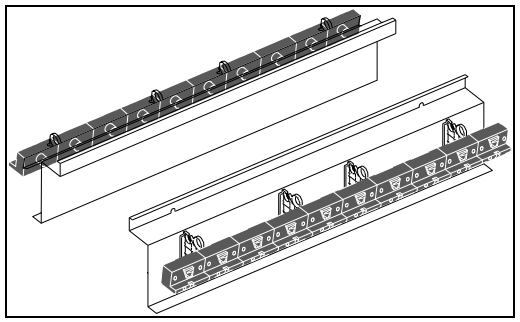

378

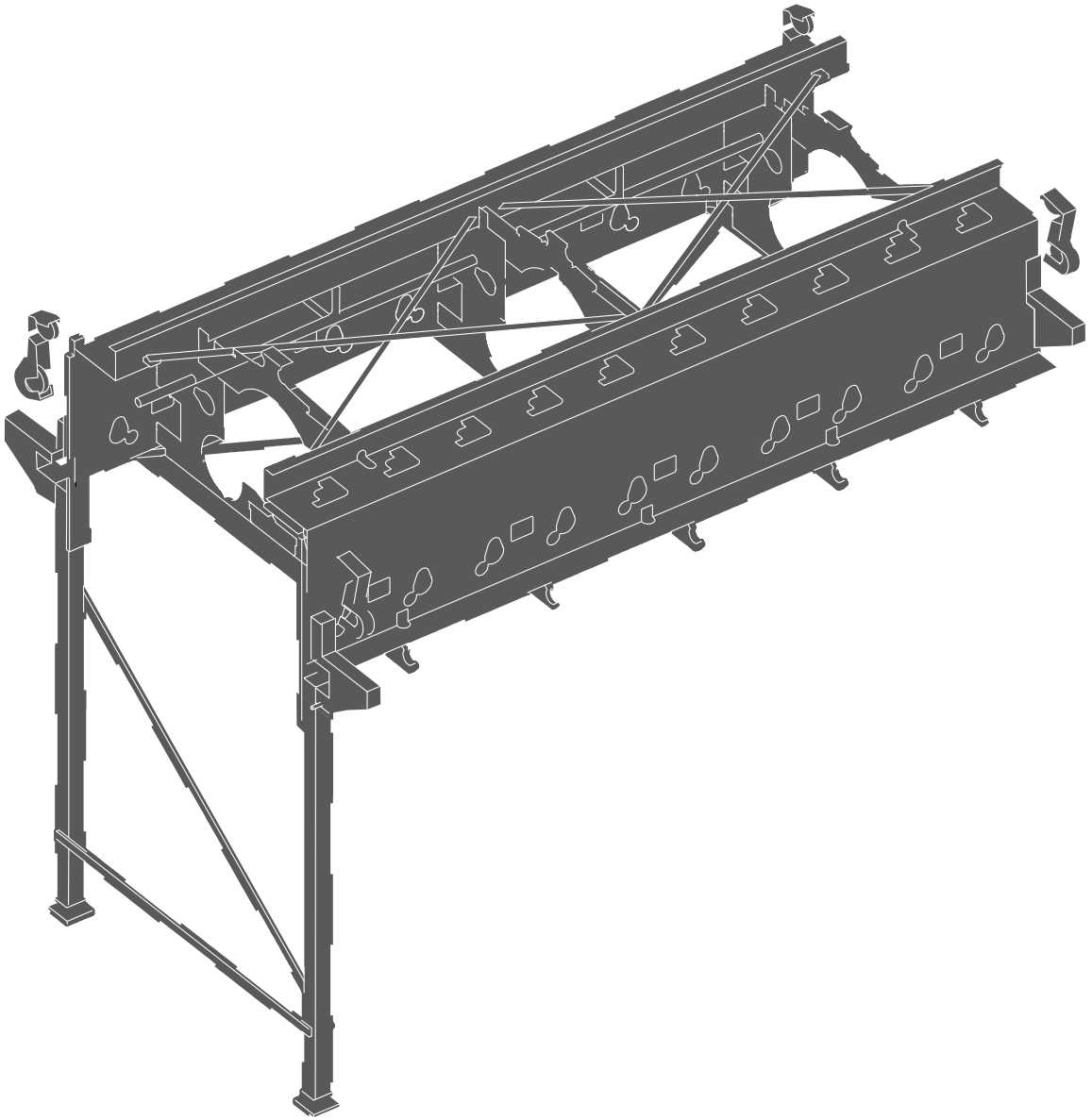

R 36

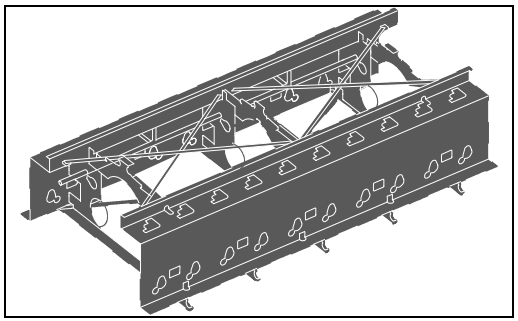

30310

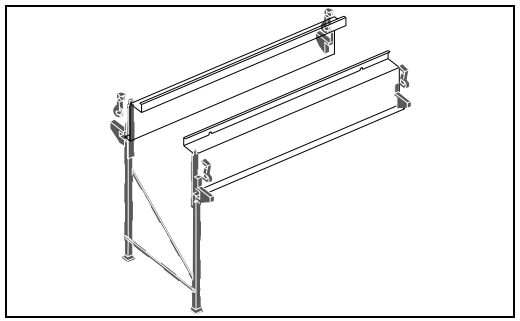

30340

R 36

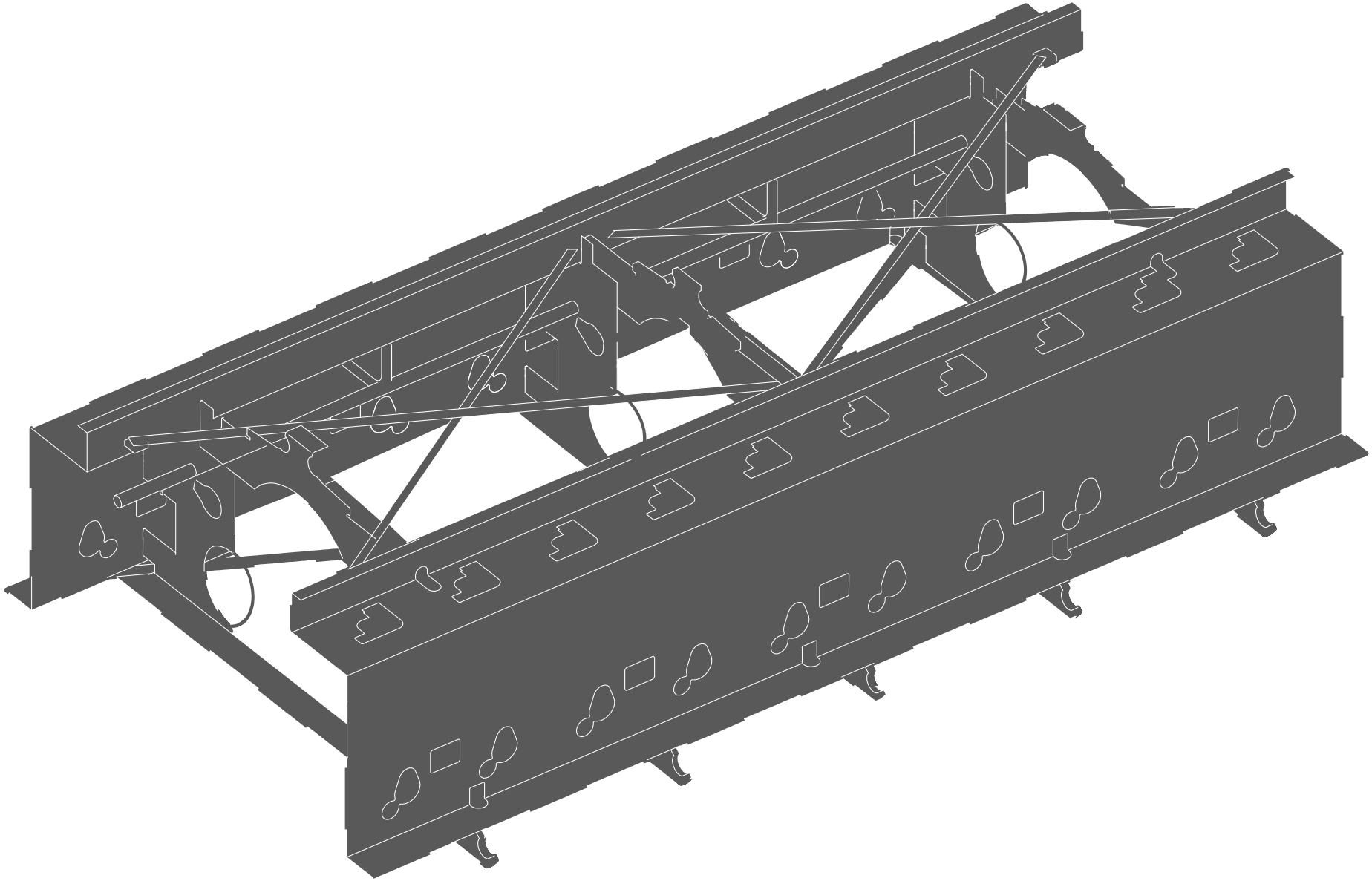

30310

Navi_3_03_10_01.cgm

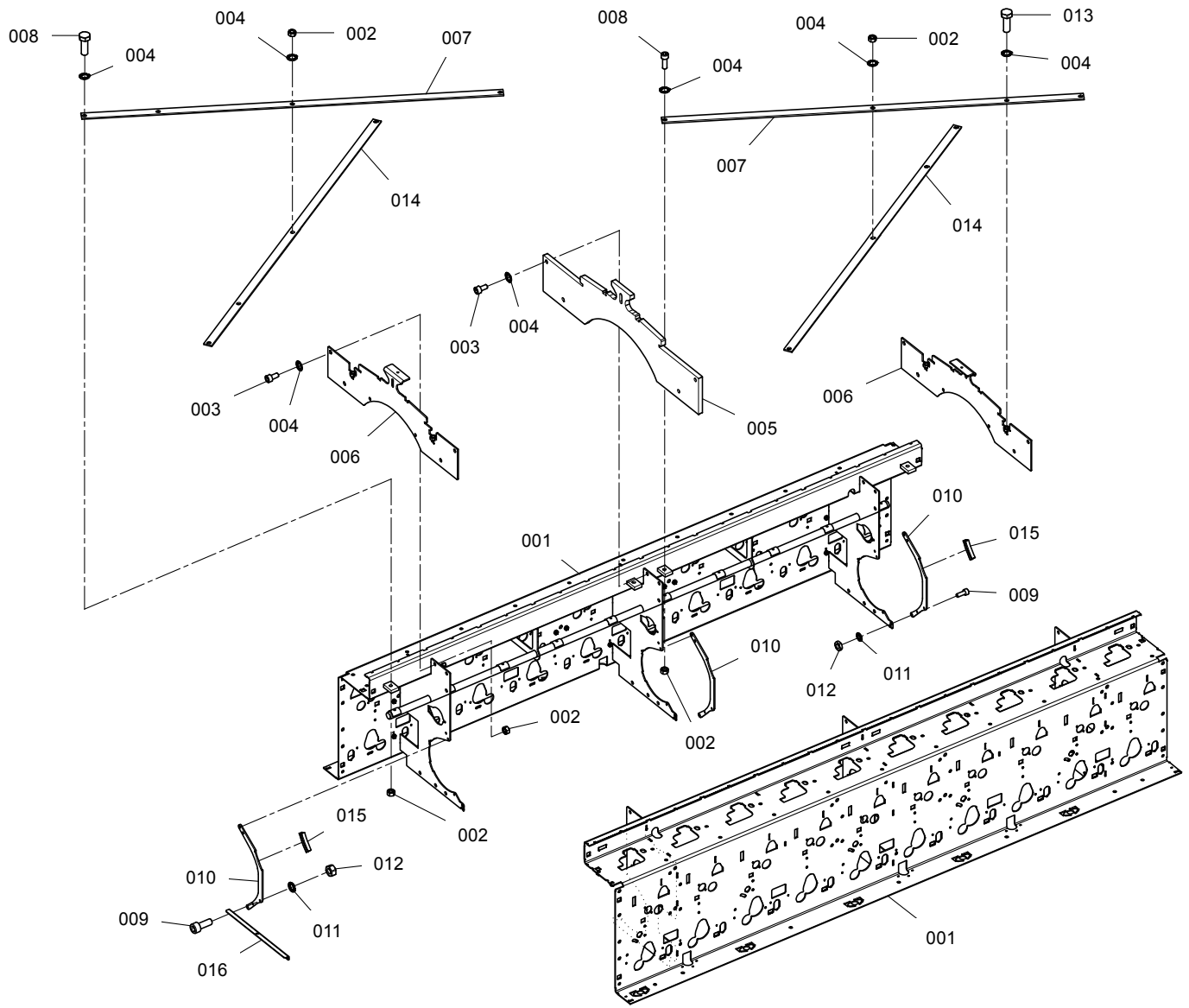

RXX_3_03_10_101.cgm

58361

Catalogue no. Katalog-Nr.	Part No. Material-Nr.	Part description en	Material-Bezeichnung de	Comment Bemerkung
30310.001	10901116	Beam complete	Balken komplett	
30310.002	10431840	Hexagon nut M10-8	6kt-Mutter M10-8	
30310.003	10241973	Cyl.screw M10x20	Zyl.Schraube M10x20	
30310.004	10259423	Locking washer 10.5/16	Sicherungsscheibe 10.5/16	
30310.005	10903240	Connecting strut	Verbindungsstrebe	
30310.006	10902098	Connecting strut complete	Verbindungsstrebe komplett	
30310.007	10901631	Stiffening top	Versteifung oben	
30310.008	10259093	Hex. screw M10x30	6kt-Schraube M10x30	
30310.009	10258828	Cyl.screw M6x16	Zyl.Schraube M6x16	
30310.010	10977502	Bow R35-V2	B?gel R35-V2	
30310.011	10258859	Locking washer 6.4/10	Sicherungsscheibe 6.4/10	
30310.012	10431759	Hexagon nut M6-8	6kt-Mutter M6-8	
30310.013	10259091	Hex. screw M10x20	6kt-Schraube M10x20	
30310.014	10922840	Stiffening rail top 2	Versteifungsschiene oben 2	
30310.015	10956130	Tube support	Schlauchst?tze	
30310.016	10979161	Channel support 24V R35-V2	Kanaltr?ger 24V R35-V2	

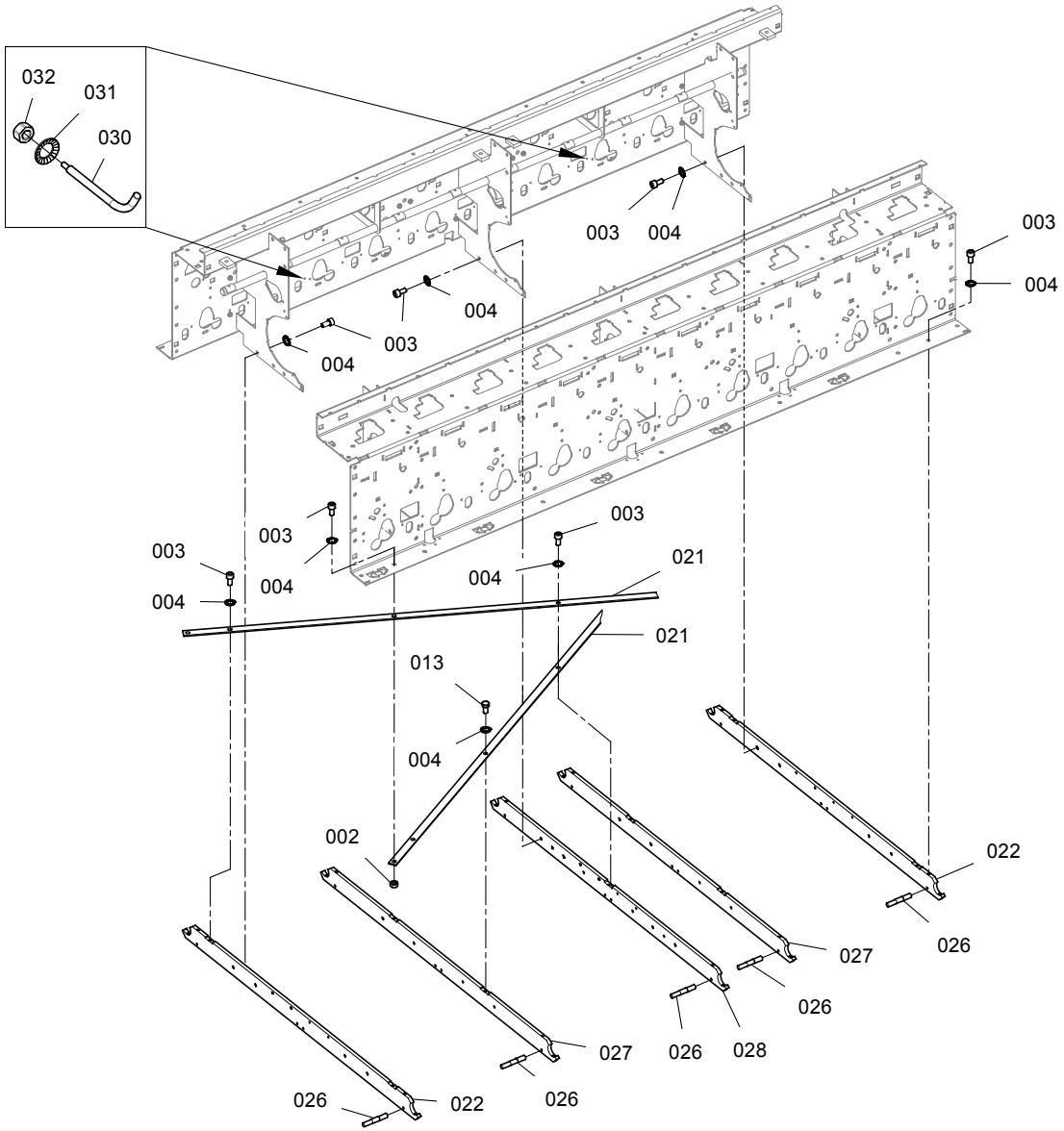
032
031
030
003
004
004
003
004
003
004
003
004
003
004
021
021
013
004
002
022
026
027
026
026
028
027
026
026
022

Catalogue no. Katalog-Nr.	Part No. Material-Nr.	Part description en	Material-Bezeichnung de	Comment Bemerkung
30310.002	10431840	Hexagon nut M10-8	6kt-Mutter M10-8	
30310.003	10241973	Cyl.screw M10x20	Zyl.Schraube M10x20	
30310.004	10259423	Locking washer 10.5/16	Sicherungsscheibe 10.5/16	
30310.013	10259091	Hex. screw M10x20	6kt-Schraube M10x20	
30310.021	10905966	Stiffening below	Versteifung unten	
30310.022	10977480	Spinning unit holder 1	Spinneinheit Halter 1	
30310.026	10489618	Cylindrical pin 5m6x40	Zylinderstift 5m6x40	
30310.027	10977492	Spinning unit holder 2	Spinneinheit Halter 2	
30310.028	10977494	Spinning unit holder 3	Spinneinheit Halter 3	
30310.030	10958599	Contact-voltage proof belt	Ber?hrungsschutz Riemen	
30310.031	10483781	Locking washer 5.3/9	Sicherungsscheibe 5.3/9	
30310.032	10259454	Hexagon nut M5-6	6kt-Mutter M5-6	

R 36

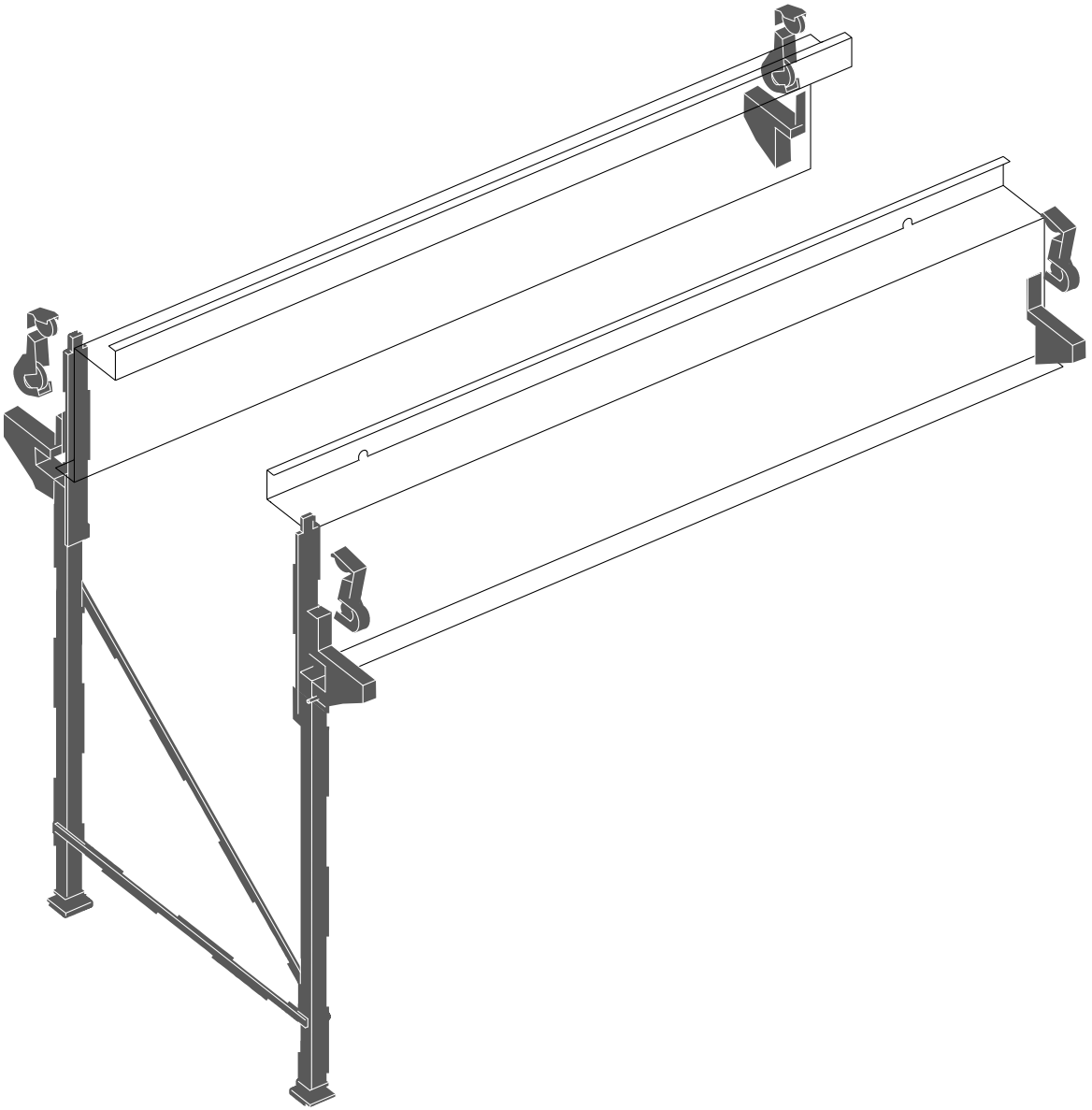

30340

Navi_3_03_40_01.cgm

R 36

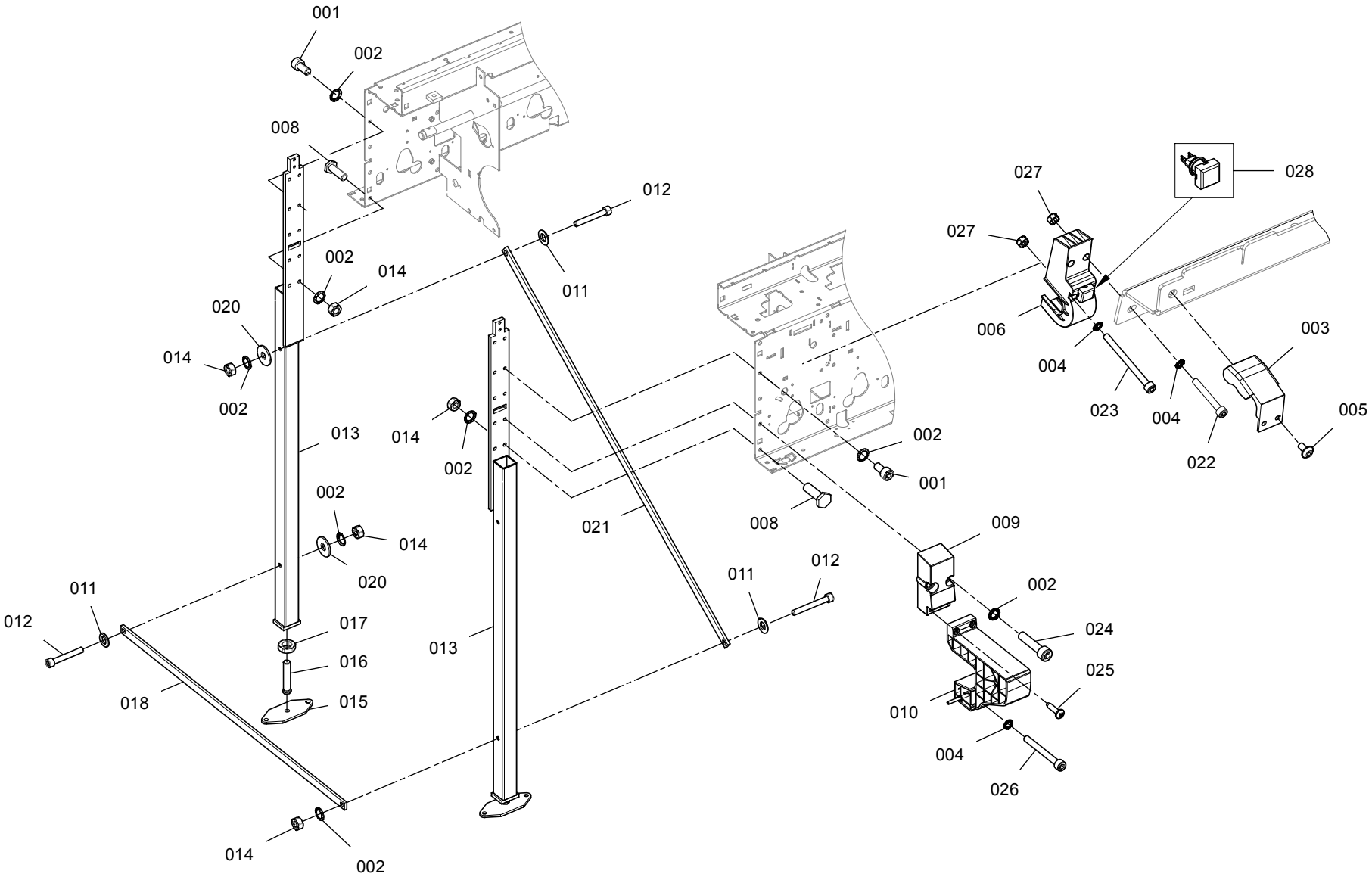

30340

RXX_3_03_40_101.cgm

Catalogue no. Katalog-Nr.	Part No. Material-Nr.	Part description en	Material-Bezeichnung de	Comment Bemerkung
30340.001	10241973	Cyl.screw M10x20	Zyl.Schraube M10x20	
30340.002	10259423	Locking washer 10.5/16	Sicherungsscheibe 10.5/16	
30340.003	10771357	Covering top	Verkleidung oben	
30340.004	10259659	Locking washer 6.4/10	Sicherungsscheibe 6.4/10	
30340.005	10114741	Oval head screw flange M6x12	Linsenschraube Flansch M6x12	
30340.006	10774468	Cover delivery shaft	Abdeckung Abzugswelle	
30340.008	10358538	Screw right	Schraube rechts	
30340.009	10924118	Filling piece	F?llst?ck	
30340.010	10782051	Covering belt COMPL.	Verkleidung Riemen COMPL.	
30340.011	10450521	Washer 10.5-St-140HV	Scheibe 10.5-St-140HV	
30340.012	10084673	Cyl.screw M10x80	Zyl.Schraube M10x80	
30340.013	10950123	Foot piece welded 1070 CAN 42	St?tzfuss geschweisst 1070 CAN 42	
30340.014	10259610	Hexagon nut M10-6	6kt-Mutter M10-6	
30340.015	10751279	Washer with lowering	Scheibe m. Senkung	
30340.016	UA3811051	Screw	Schraube	
30340.017	10568237	Hexagon nut M20x1.5-06	6kt-Mutter M20x1.5-06	
30340.018	10922951	Supporting brace 1	St?tzstrebe 1	
30340.020	10356624	Washer 10.5-St-100HV	Scheibe 10.5-St-100HV	
30340.021	10922952	Supporting brace 2	St?tzstrebe 2	
30340.022	10258933	Cyl.screw M6x45	Zyl.Schraube M6x45	
30340.023	10258940	Cyl.screw M6x75	Zyl.Schraube M6x75	
30340.024	10258969	Cyl.screw M10x45	Zyl.Schraube M10x45	
30340.025	10550363	Screw for plastic KA50x20-H	PT-Linsenschraube KA50x20-H	
30340.026	10091456	Cyl.screw M6x55	Zyl.Schraube M6x55	
30340.027	10259495	Hexagon nut M6-6	6kt-Mutter M6-6	
30340.028	10138296	Indicator lamp red 25x25 kpl.	Meldelampe rot 25x25 kpl.	

R 36

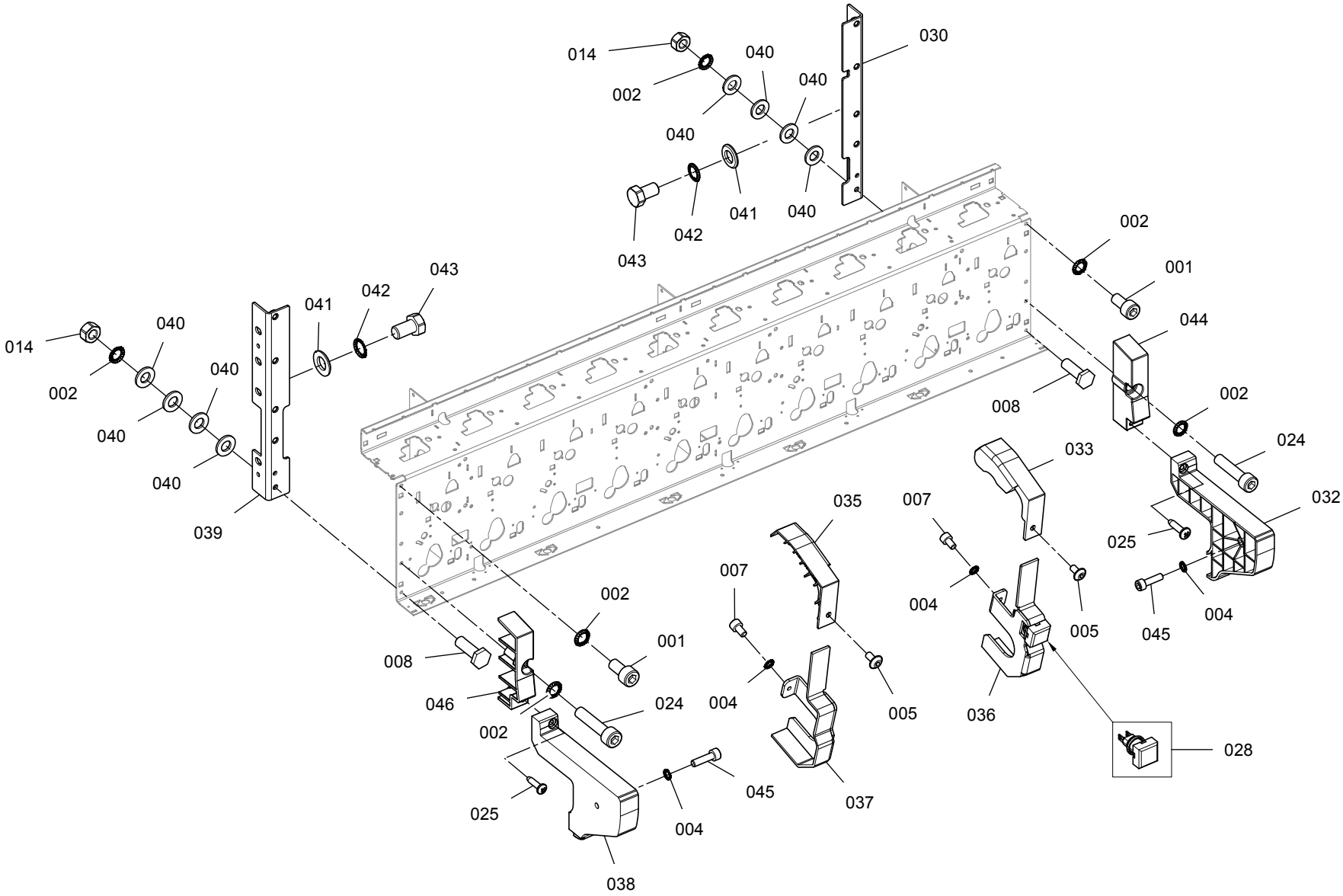

30340

RXX_3_03_40_201.cgm

Catalogue no. Katalog-Nr.	Part No. Material-Nr.	Part description en	Material-Bezeichnung de	Comment Bemerkung
30340.001	10241973	Cyl.screw M10x20	Zyl.Schraube M10x20	
30340.002	10259423	Locking washer 10.5/16	Sicherungsscheibe 10.5/16	
30340.004	10259659	Locking washer 6.4/10	Sicherungsscheibe 6.4/10	
30340.005	10114741	Oval head screw flange M6x12	Linsenschraube Flansch M6x12	
30340.007	10258830	Cyl.screw M6x10	Zyl.Schraube M6x10	
30340.008	10358538	Screw right	Schraube rechts	
30340.014	10259610	Hexagon nut M10-6	6kt-Mutter M10-6	
30340.024	10258969	Cyl.screw M10x45	Zyl.Schraube M10x45	
30340.025	10550363	Screw for plastic KA50x20-H	PT-Linsenschraube KA50x20-H	
30340.028	10138296	Indicator lamp red 25x25 kpl.	Meldelampe rot 25x25 kpl.	
30340.030	10665210	Angle piece right	Winkelst?ck rechts	
30340.032	10782887	Cover bottom - R	Abdeckung Boden - R	
30340.033	10783510	Cover top R	Abdeckung oben R	
30340.035	10783506	Cover top L	Abdeckung oben L	
30340.036	10812644	Cape hood BOWEX 1 COMPL. B	Verdeck BOWEX 1 COMPL. B	
30340.037	10812670	Cover complete 1A	Abdeckung komplett 1A	
30340.038	10782807	Cover bottom - L	Abdeckung Boden - L	
30340.039	10665204	Angle piece left	Winkelst?ck links	
30340.040	10478062	Washer 10.5-St-200HV	Scheibe 10.5-St-200HV	
30340.041	10455614	Washer 13-St-200HV	Scheibe 13-St-200HV	
30340.042	10356695	Locking washer 13/18	Sicherungsscheibe 13/18	
30340.043	10259095	Hex. screw M12x20	6kt-Schraube M12x20	
30340.044	10924419	Filling piece - R	F?llst?ck - R	
30340.045	10258927	Cyl.screw M6x22	Zyl.Schraube M6x22	
30340.046	10924464	Filling piece - L	F?llst?ck - L	

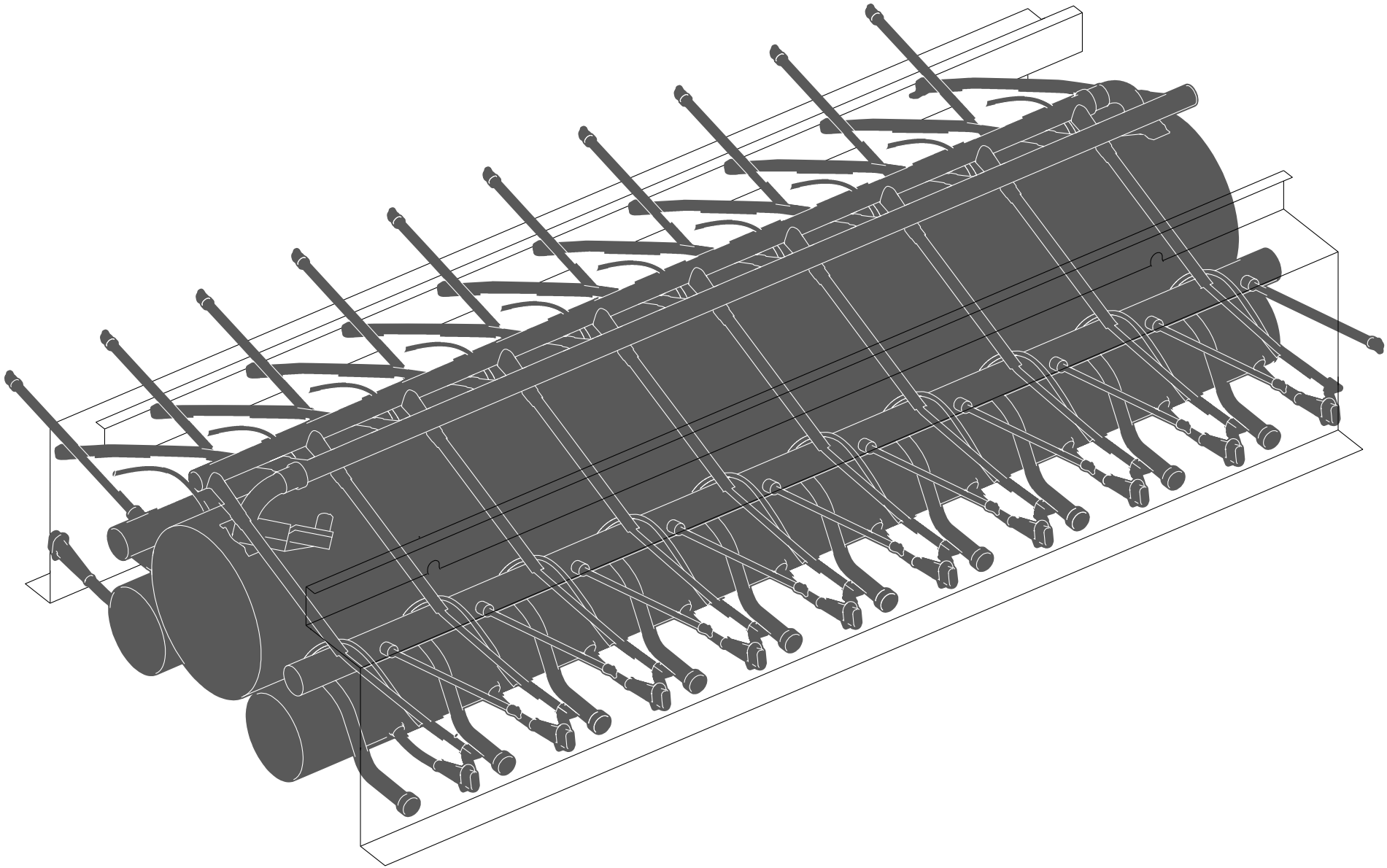

R 36

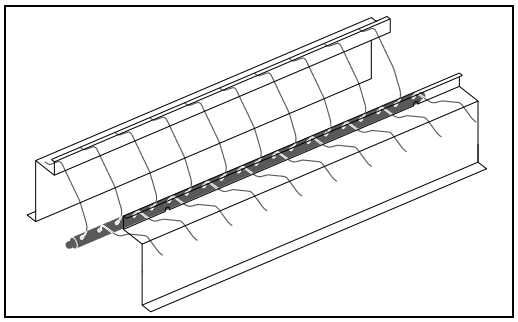

30610

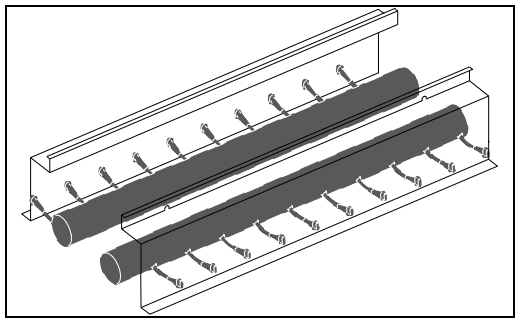

30620

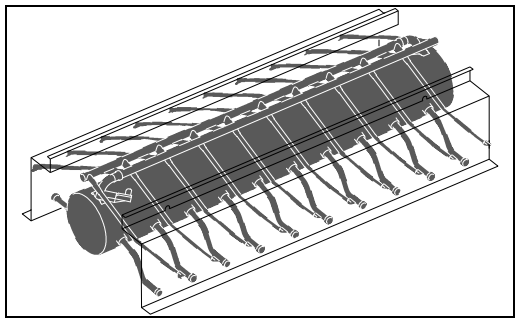

30630

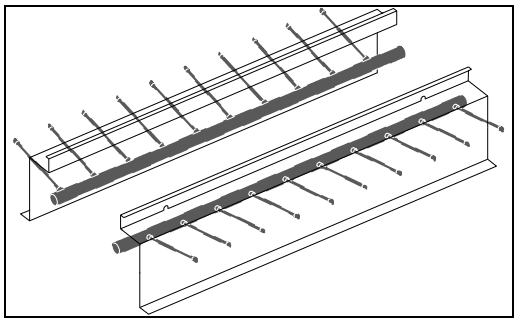

30640

R 36

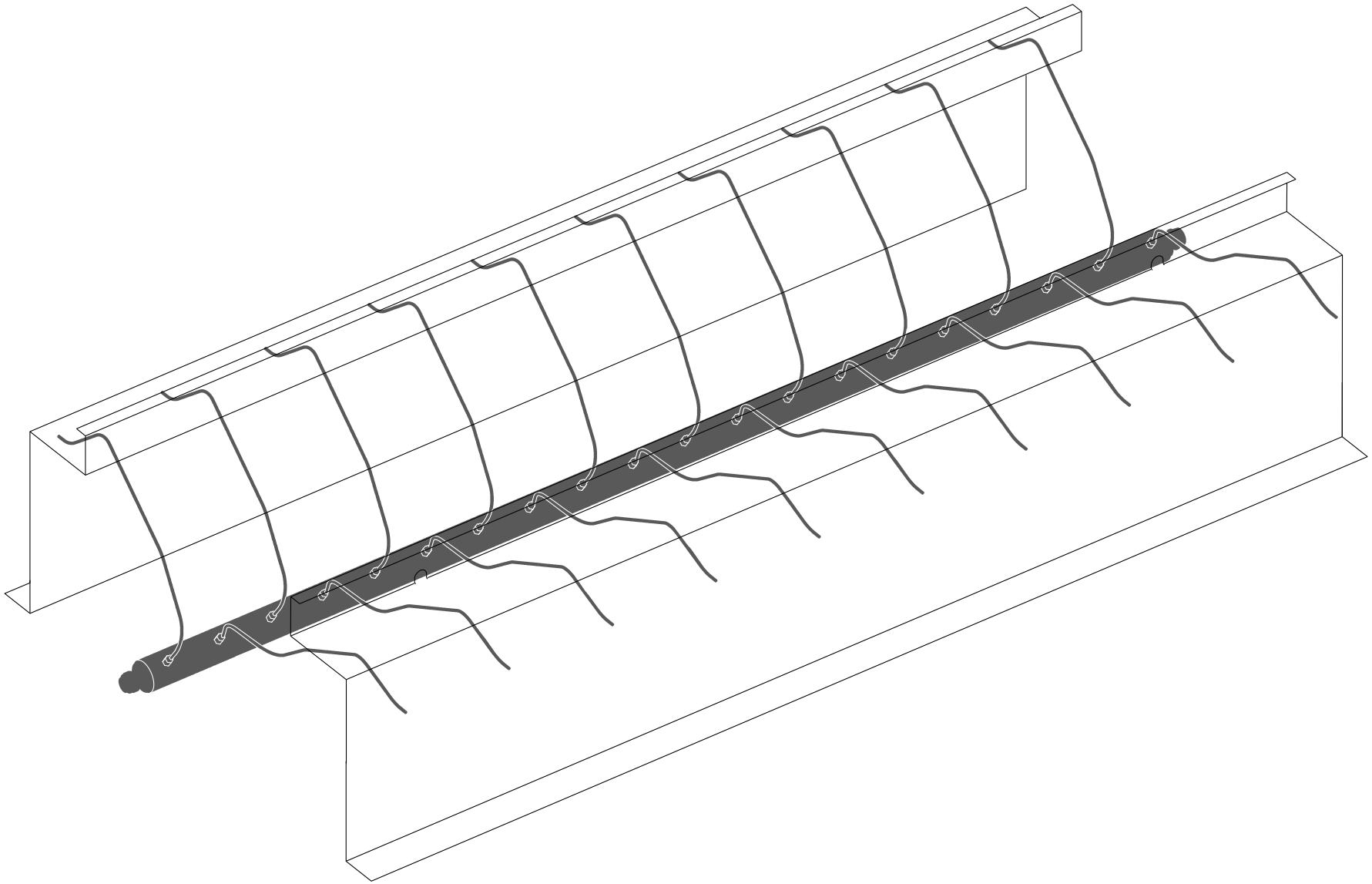

30610

Navi_3_06_10_01.cgm

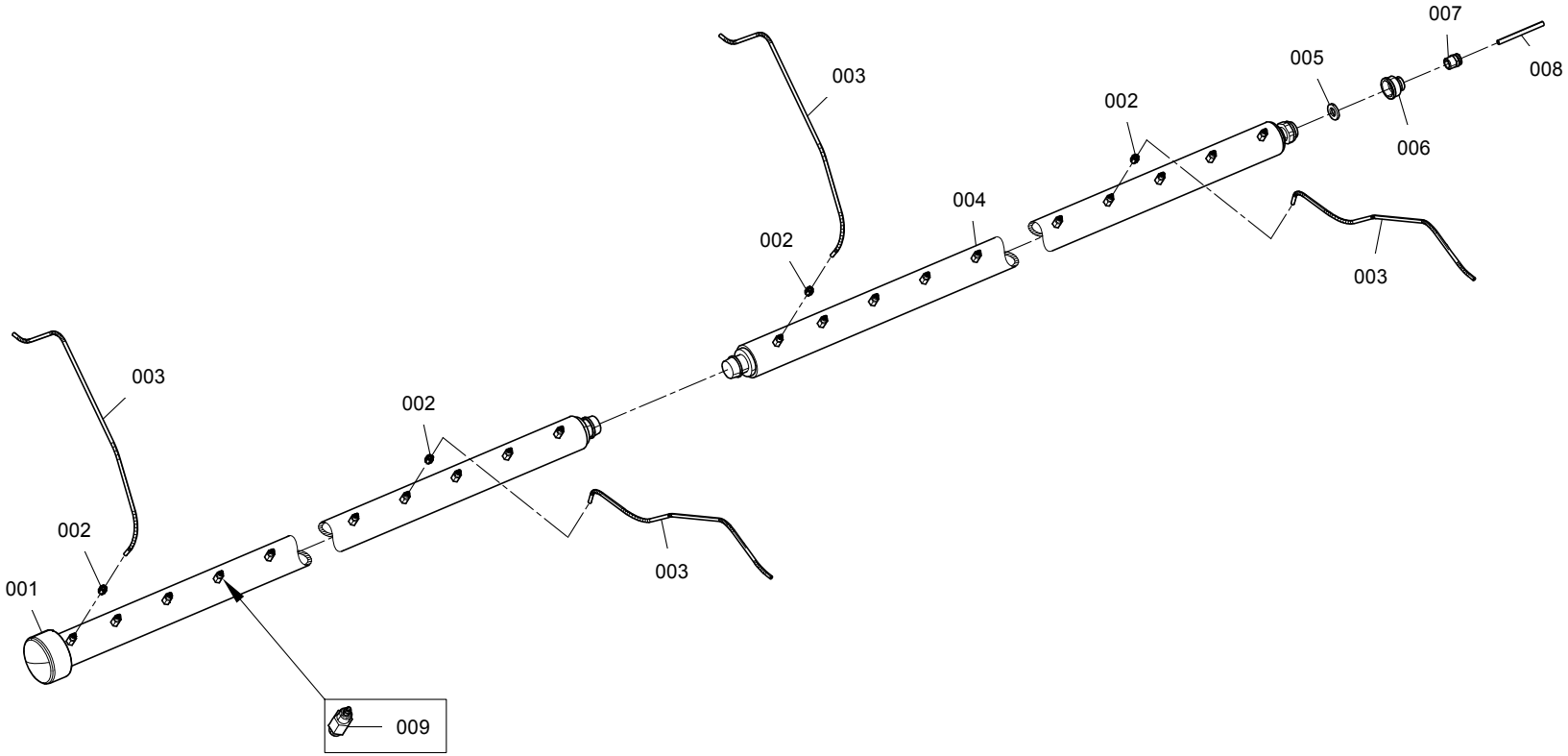
007
008
005
003
002
006
004
002
003
003
002
002
001
009

Catalogue no. Katalog-Nr.	Part No. Material-Nr.	Part description en	Material-Bezeichnung de	Comment Bemerkung
30610.001	11039224	Air supply tube end	Luftanschlussrohr Ende	
30610.002	1084963	Union nut MCK-PK-4-KU	? berwurfmutter MCK-PK-4-KU	
30610.003	10977843	Hydraulic tube 4/6-900	Hydraulikschlauch 4/6-900	
30610.004	11039186	Air supply tube	Luftanschlussrohr	
30610.005	10794502	Sealing disk/gasket 16/30-4	Dichtscheibe 16/30-4	
30610.006	U21050011	Reduction MOSAZ 240 1"x1/2"	Reduktion MOSAZ 240 1"x1/2"	
30610.007	10828111	Tube connector APC8-04	Schlauchverbinder APC8-04	
30610.008	10980524	Hose black 8 - 1900	Schlauch schwarz 8 - 1900	
30610.009	10978168	Hose connection part	Schlauchanschluss Teil	

R 36

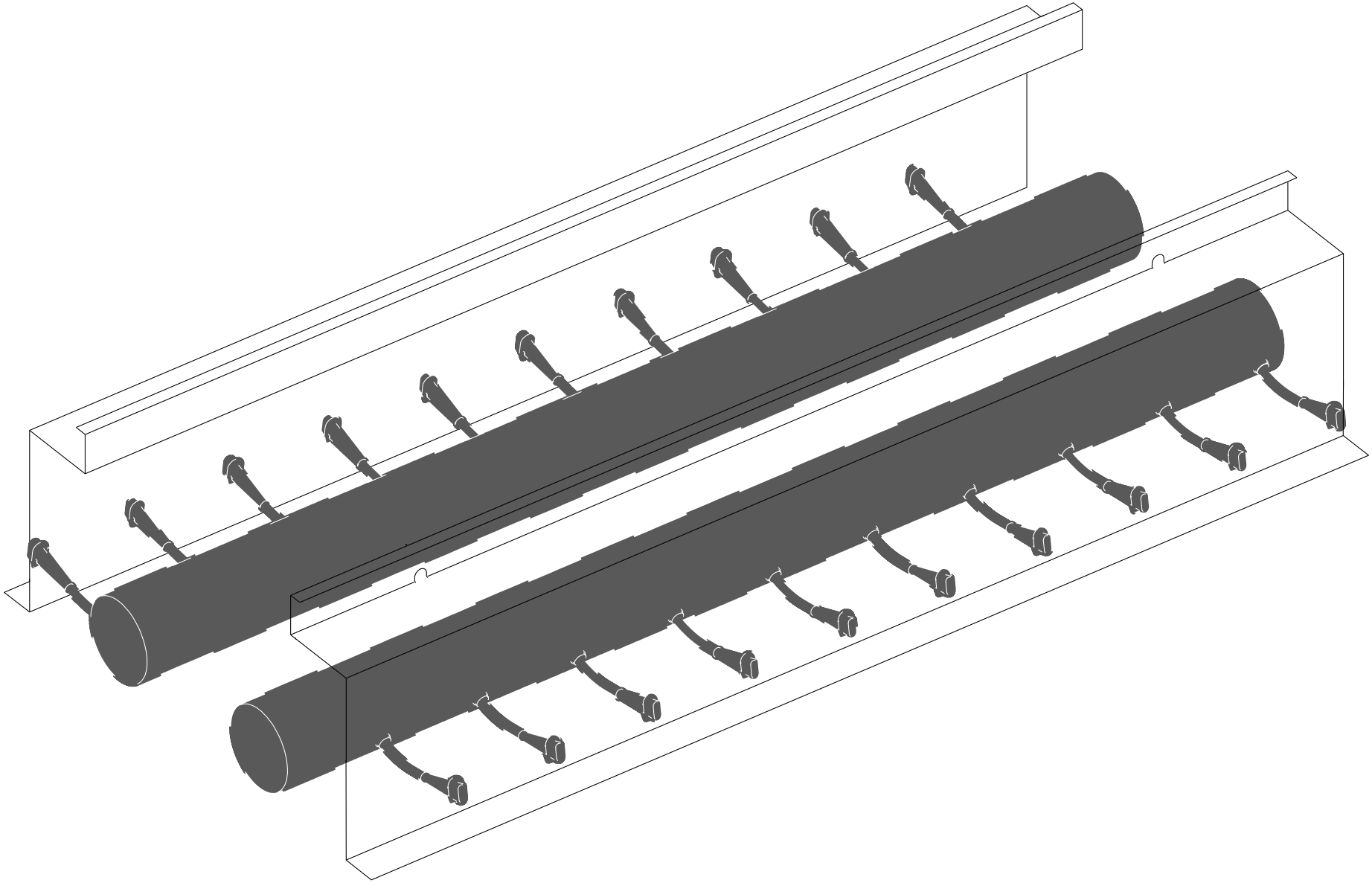

30620

Navi_3_06_20_01.cgm

R 36

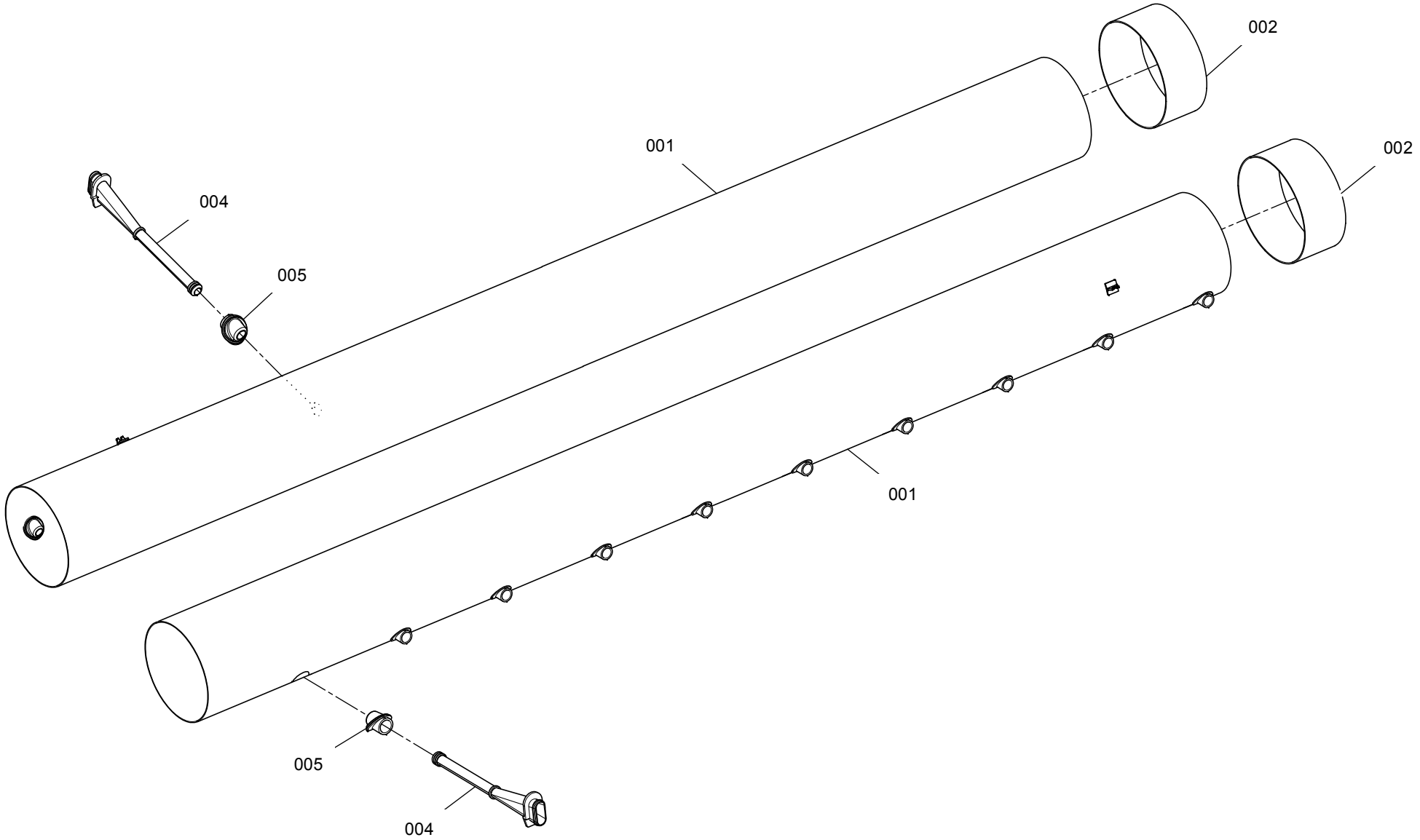

30620

RXX_3_06_20_101.cgm

58361

Catalogue no. Katalog-Nr.	Part No. Material-Nr.	Part description en	Material-Bezeichnung de	Comment Bemerkung
30620.001	10921855	Suction for waste removal	Schmutzabsaugung	
30620.002	10791799	Hose di220x2x80-EPDM	Schlauch di220x2x80-EPDM	
30620.004	10921866	Pipe red d12,3 R35 V2	Rohr rot d12,3 R35 V2	
30620.004	10924669	Pipe blue d10,5 R35 V2	Rohr blau d10,5 R35 V2	
30620.004	10924671	Pipe natural d10 R35 V2	Rohr natur d10 R35 V2	
30620.004	10961857	Pipe green d11 R35 V2	Rohr gr?n d11 R35 V2	
30620.004	10961889	Pipe brown d11,65 R35 V2	Rohr braun d11,65 R35 V2	
30620.005	10922310	Sealing sleeve	Dichtungsh?lse	

R 36

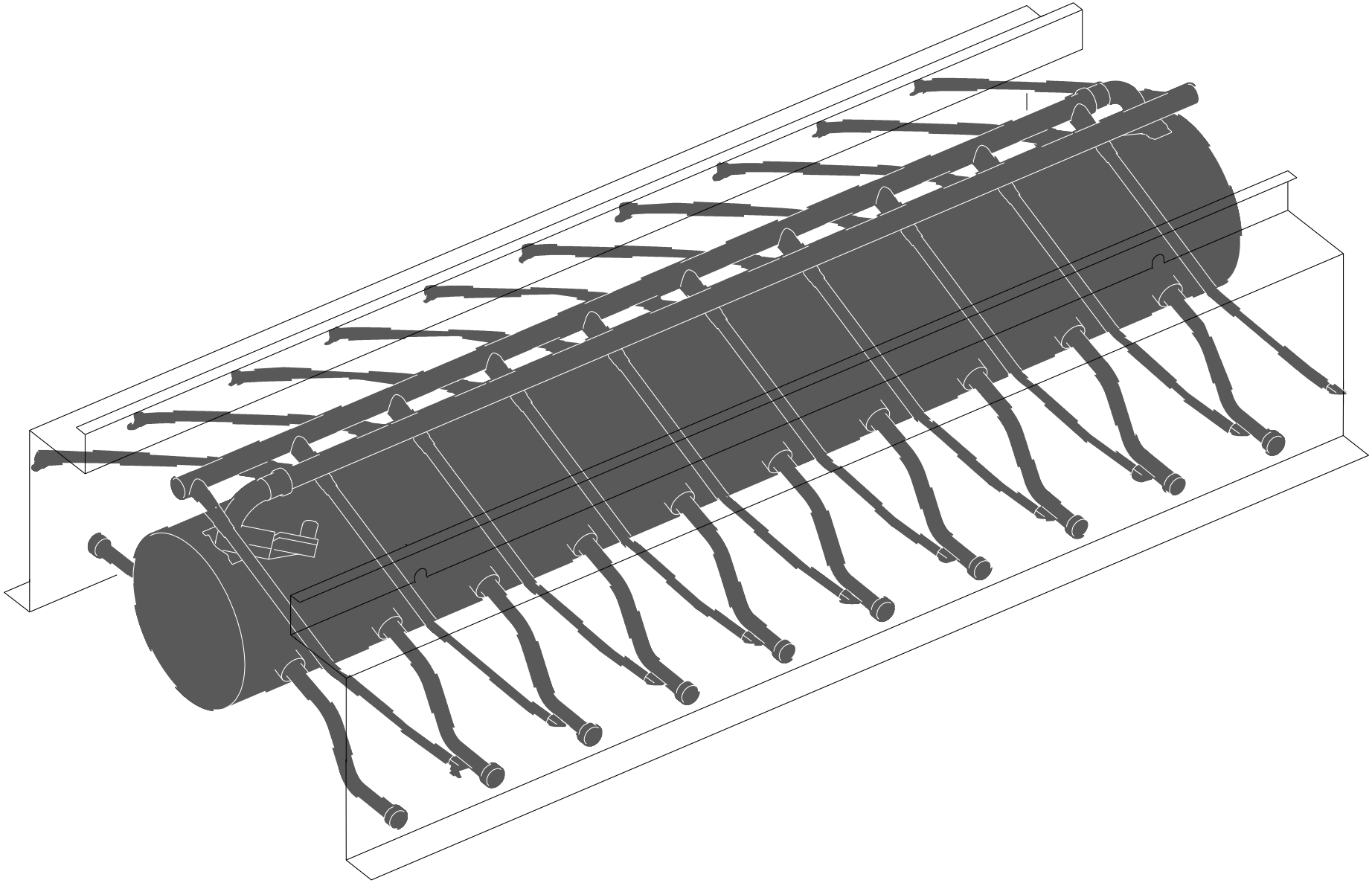

30630

Navi_3_06_30_01.cgm

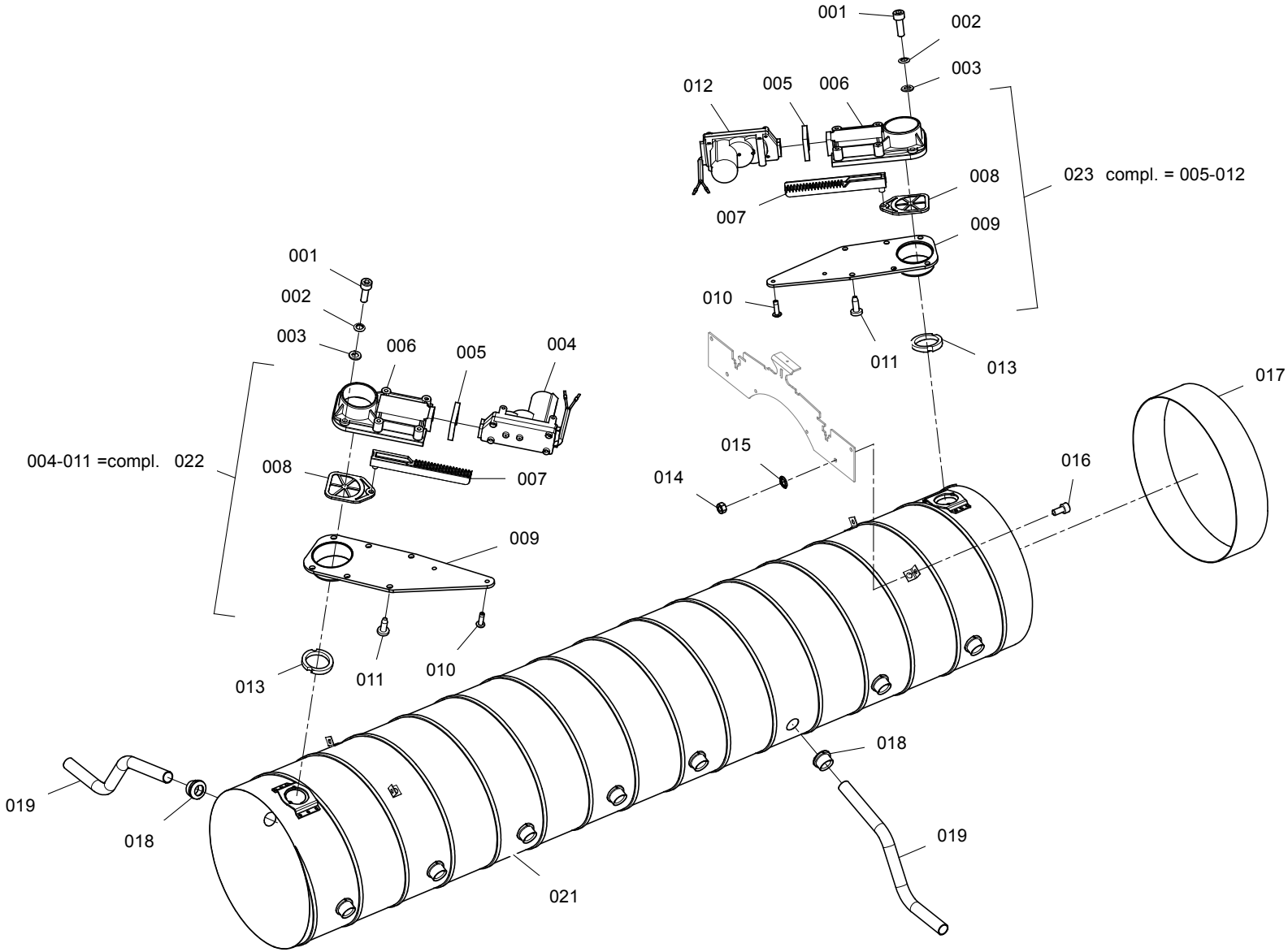

RXX_3_06_30_101.cgm

Catalogue no. Katalog-Nr.	Part No. Material-Nr.	Part description en	Material-Bezeichnung de	Comment Bemerkung
30630.001	10258913	Cyl.screw M5x16	Zyl.Schraube M5x16	
30630.002	10483781	Locking washer 5.3/9	Sicherungsscheibe 5.3/9	
30630.003	10245275	Washer 5.3-St-140HV	Scheibe 5.3-St-140HV	
30630.004	10820216	Servomotor DC24V	Servomotor DC24V	
30630.005	10344313	Seal	Dichtung	
30630.006	10441288	Flap	Klappe	
30630.007	10343603	Pusher	Schieber	
30630.008	10343604	Visor	Blende	
30630.009	10445329	Guard plate	Schutzblech	
30630.010	10495626	Screw for plastic KA35x12-H	PT-Linsenschraube KA35x12-H	
30630.011	10356069	Oval head screw ST4.8x13-F-H	Linsenschraube ST4.8x13-F-H	
30630.012	10820207	Servomotor DC24V	Servomotor DC24V	
30630.013	10421698	Seal	Dichtung	
30630.014	10259607	Hexagon nut M8-8	6kt-Mutter M8-8	
30630.015	10461551	Locking washer 8.4/13	Sicherungsscheibe 8.4/13	
30630.016	10258947	Cyl.screw M8x16	Zyl.Schraube M8x16	
30630.017	10396262	Seal collar tube 356.6	Dichtmanschette H?lse 356.6	
30630.018	10538463	Seal collar	Dichtmanschette	
30630.019	10922131	Pipe	Rohr	
30630.021	10977840	Inner suction duct R35-V2	Innenraumabsaugkanal R35-V2	
30630.022	10820215	Flap left	Klappe links	
30630.023	10820203	Flap right	Klappe rechts	

R 36

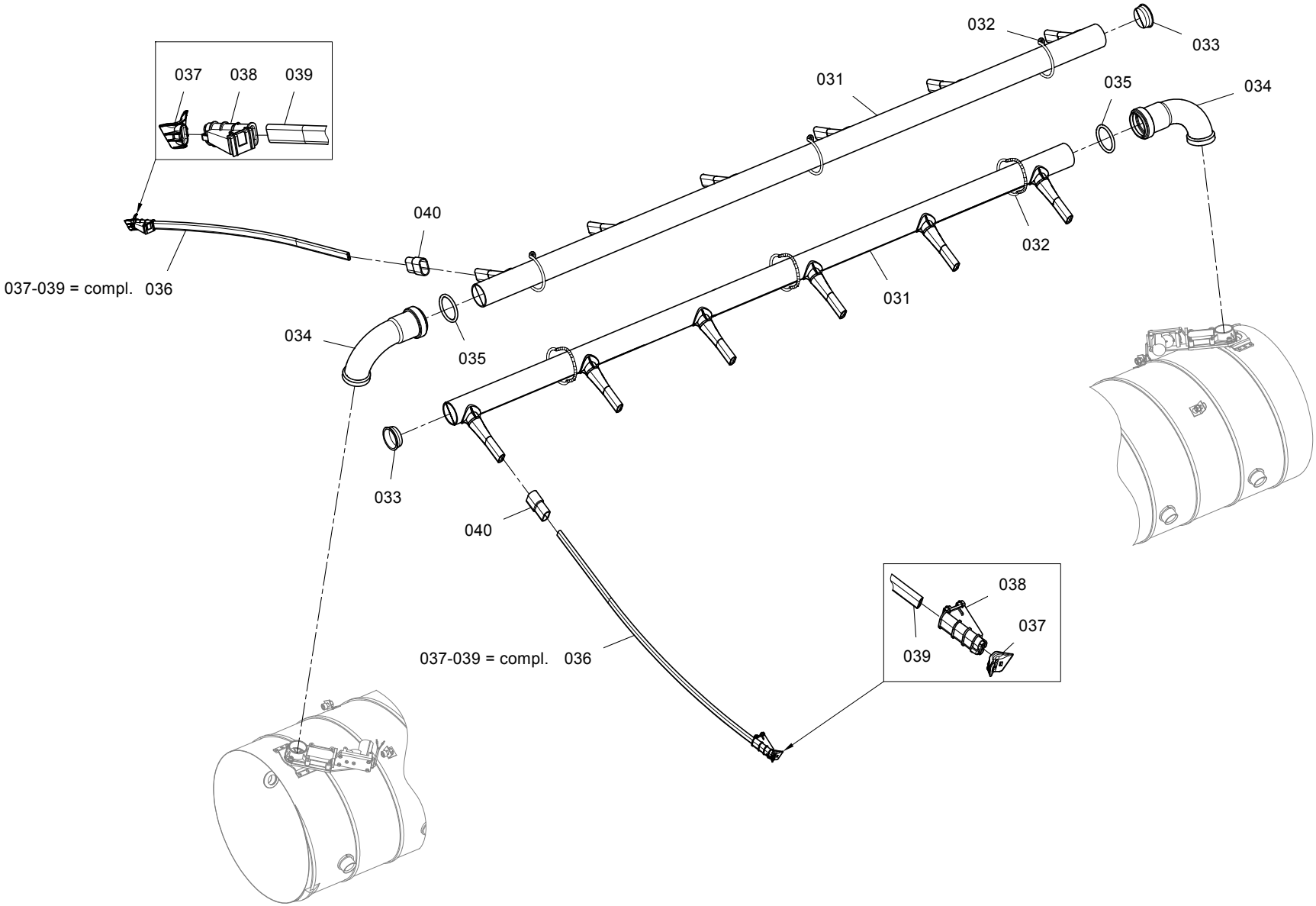

30630

RXX_3_06_30_201.cgm

Catalogue no. Katalog-Nr.	Part No. Material-Nr.	Part description en	Material-Bezeichnung de	Comment Bemerkung
30630.031	10665876	Under pressure distributor	Unterdruckverteiler	
30630.032	U44110060	Holder for cable clamp WIT-60R	Kabelbinderhalter WIT-60R	
30630.033	10342026	Stopper 355 OBJ.C.600 B 355	Stopfen 355 OBJ.C.600 B 355	
30630.034	10903250	Elbow low	Kr?mmer nieder	
30630.035	10781741	U-shaped ring gasket	B?rdeldichtring	
30630.036	10901569	Profile complete	Profil komplett	
30630.037	10823764	Guidance	F?hrungsteil	
30630.038	10709250	Support for suction pipe	Absaugrohrhalter	
30630.039	10901570	Rail	Schiene	
30630.040	10476870	Wire jumper	Drahtbr?cke	

R 36

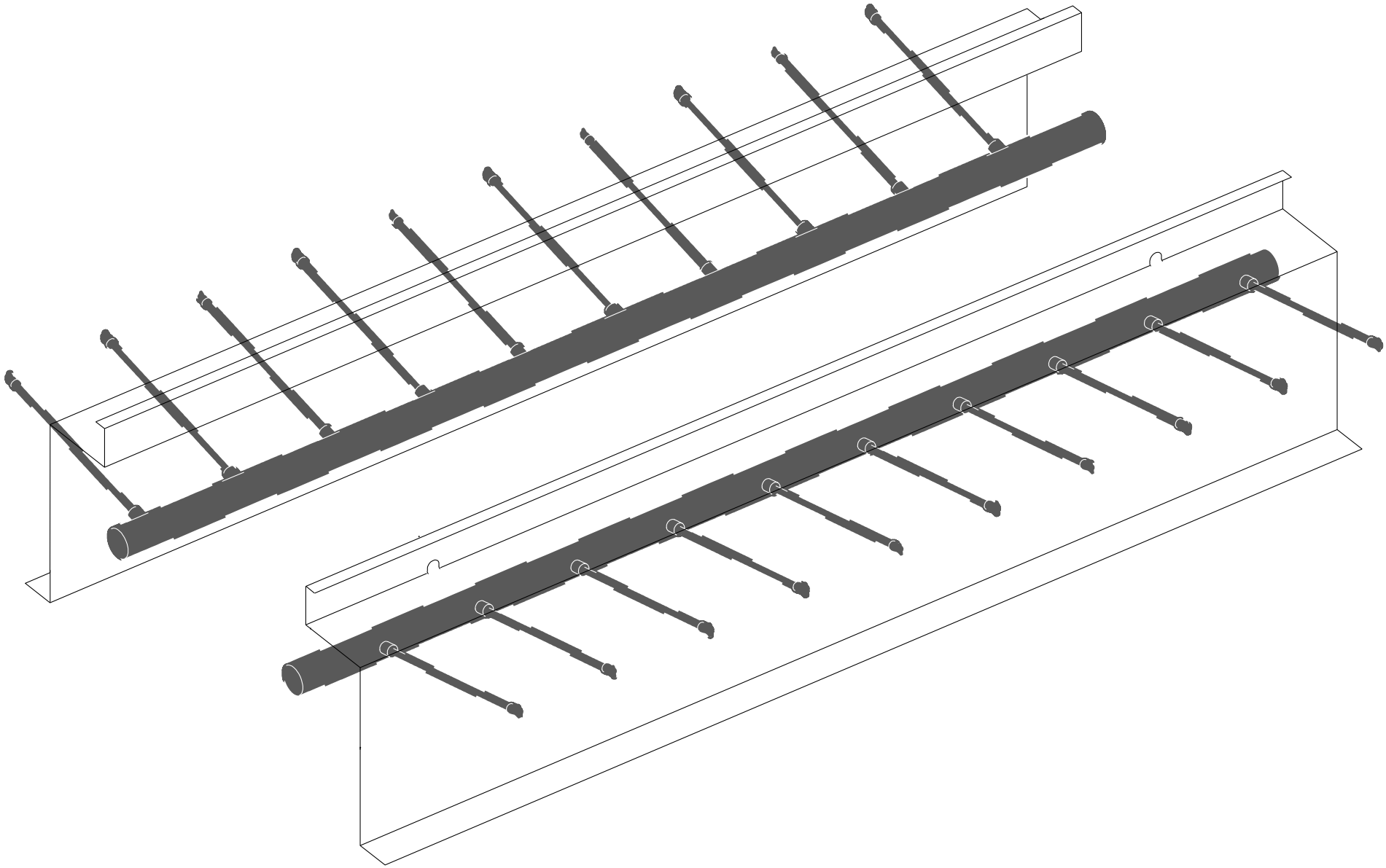

30640

Navi_3_06_40_01.cgm

R 36

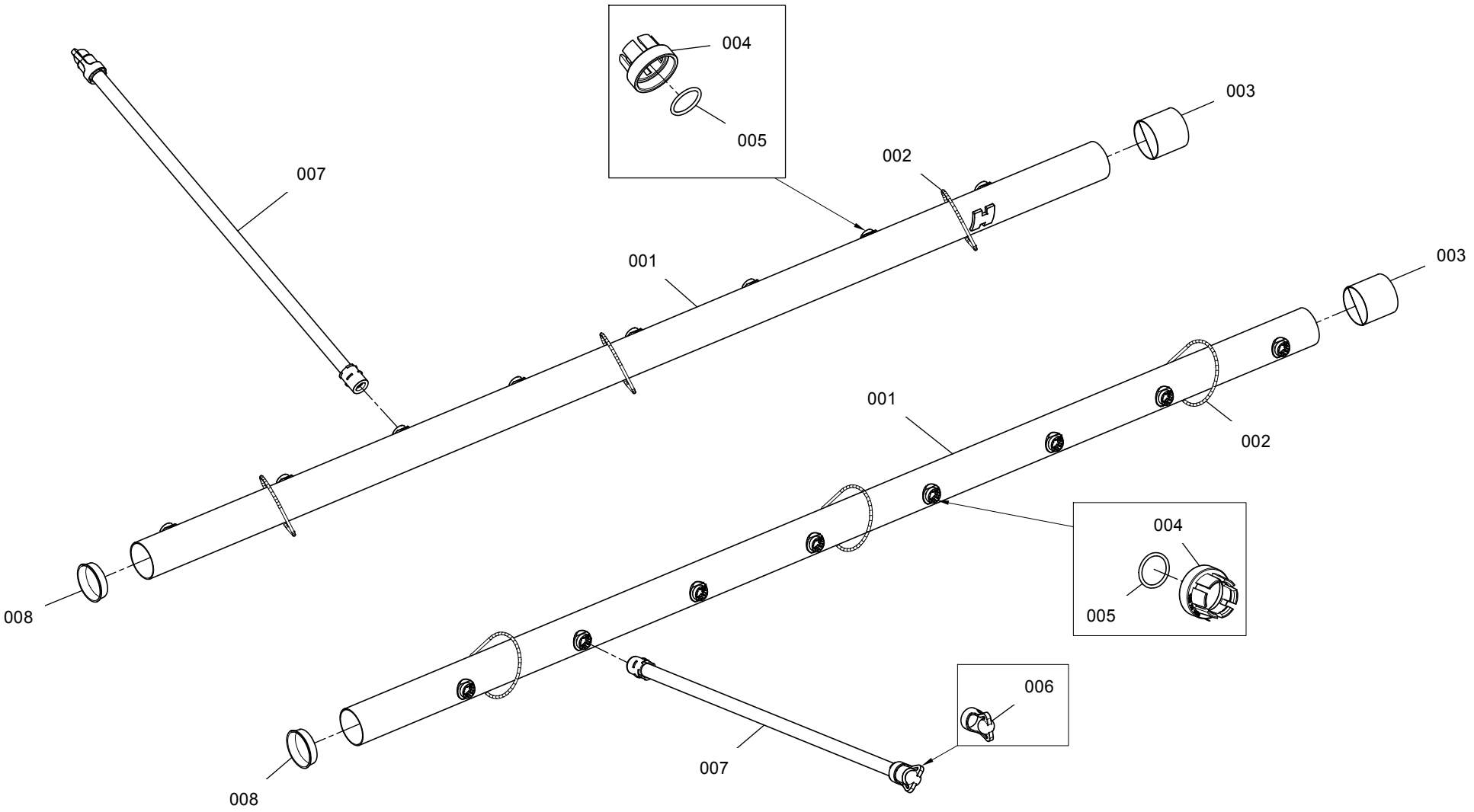

30640

RXX_3_06_40_101.cgm

Catalogue no. Katalog-Nr.	Part No. Material-Nr.	Part description en	Material-Bezeichnung de	Comment Bemerkung
30640.001	10714420	Air mover	Fadenabsaugsystem	
30640.002	U44110060	Holder for cable clamp WIT-60R	Kabelbinderhalter WIT-60R	
30640.003	10554607	Seal collar tube 63	Dichtmanschette H?lse 63	
30640.004	10574160	Fastening piece 3R	Fixierst?ck 3R	
30640.005	10259492	O-ring 16x2-NBR-70 ShA	O-Ring 16x2-NBR-70 ShA	
30640.006	UE3140809	Obstructor	Verschluss	
30640.007	10922071	Pipe complete	Rohr komplett	
30640.008	10544359	Cape hood - 004 0585-EUROPLAST	Verdeck - 004 0585-EUROPLAST	

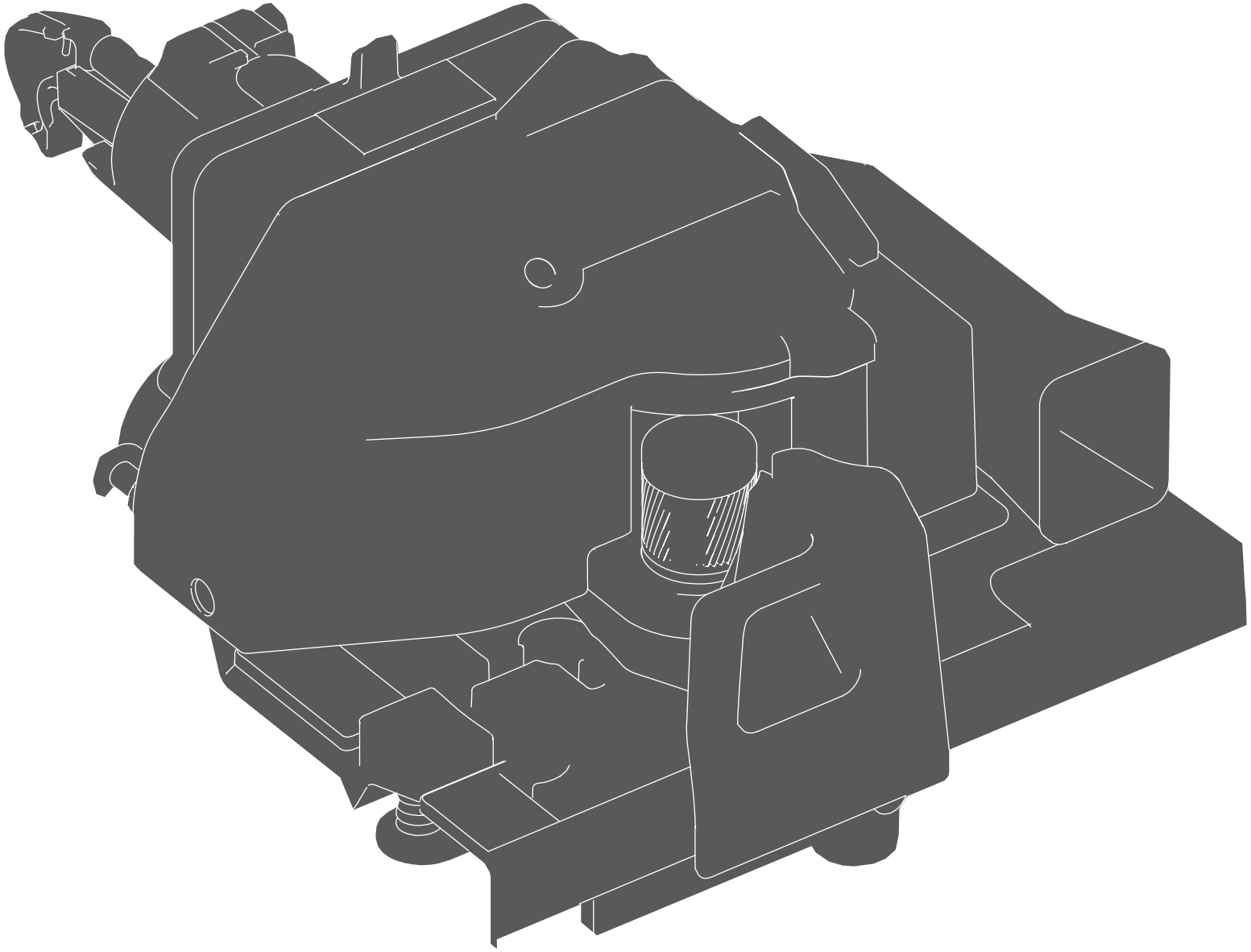

R 36

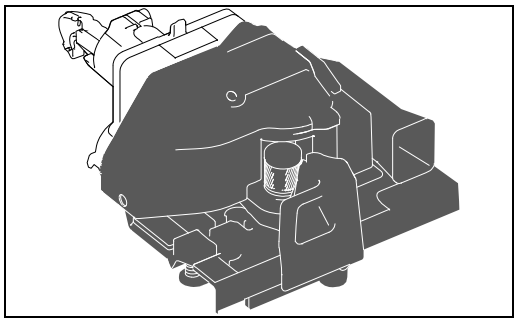

30910

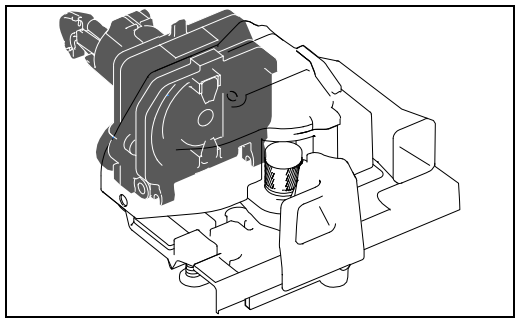

30920

R 36

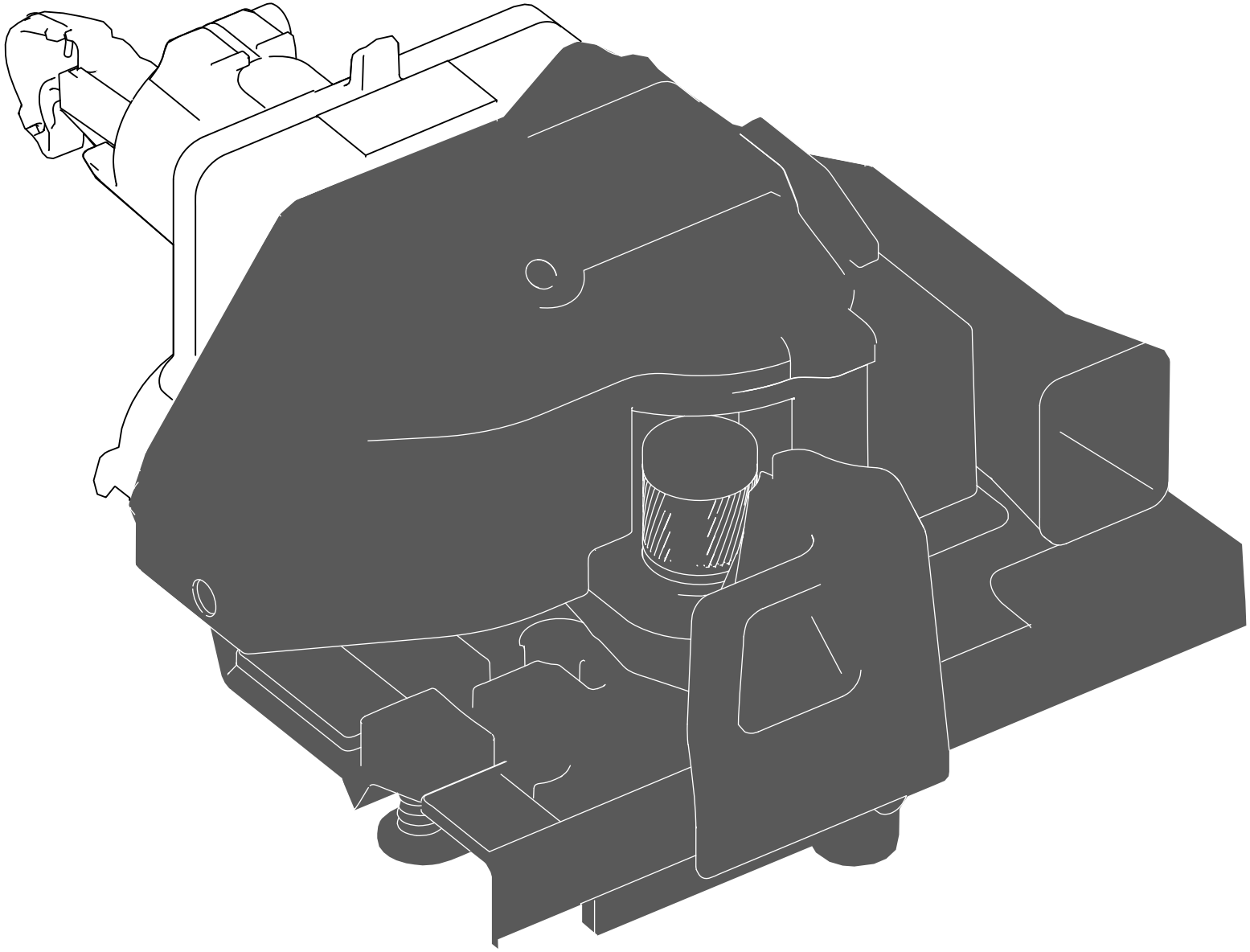

30910

Navi_3_09_10_01.cgm

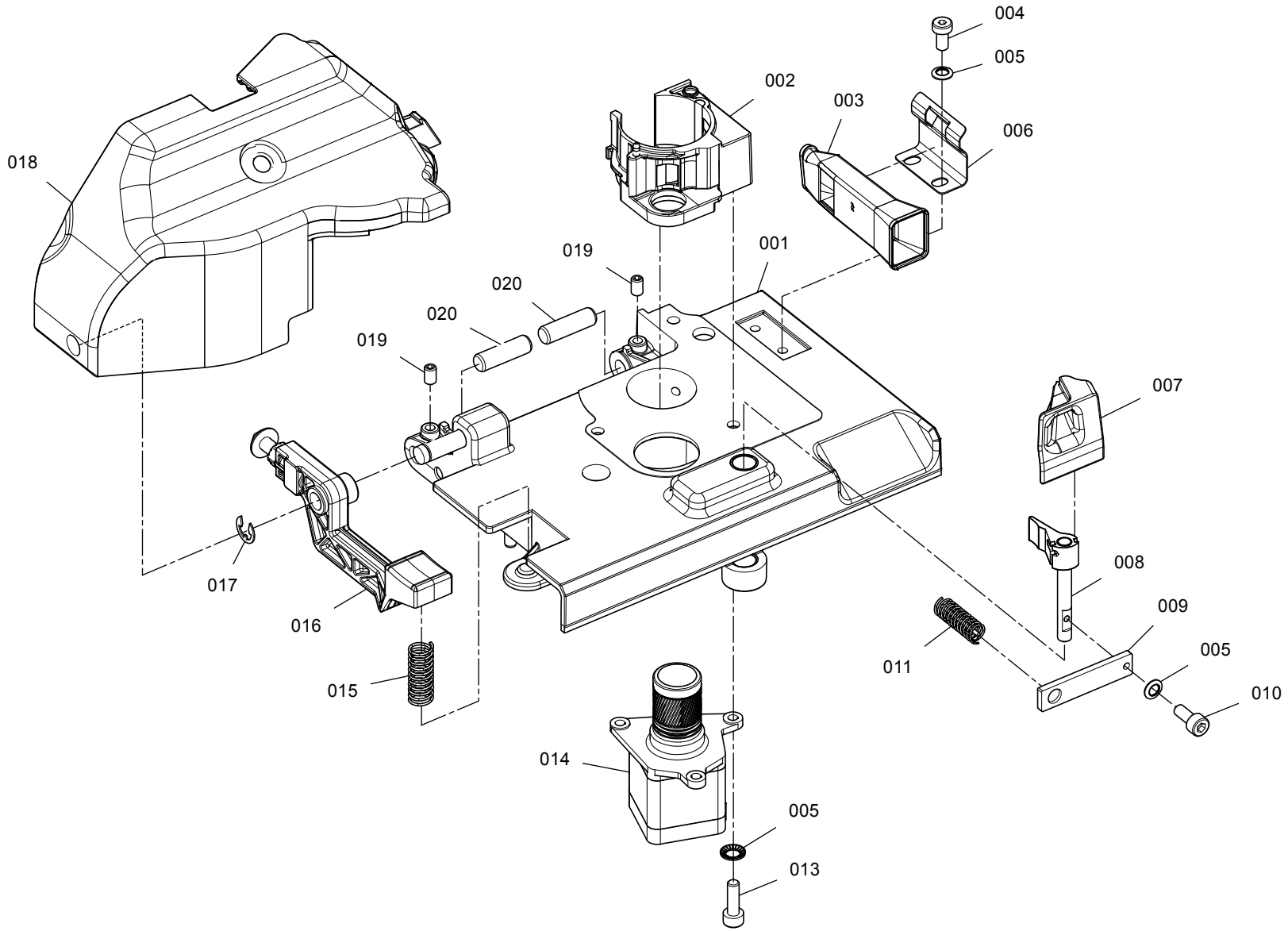

RXX_3_09_10_101.cgm

Catalogue no. Katalog-Nr.	Part No. Material-Nr.	Part description en	Material-Bezeichnung de	Comment Bemerkung
30910.001	10767239	Hinged housing preassembly V4	Schwenkgeh?use vormontiert V4	
30910.002	10983254	Opening roller housing complete	Aufl?segeh?use komplett	
30910.003	10653587	Channel	Kanal	
30910.004	10319835	Cyl.screw M5x10	Zyl.Schraube M5x10	
30910.005	10483781	Locking washer 5.3/9	Sicherungsscheibe 5.3/9	
30910.006	10852180	Pressure bracket S35 T0.6	Pression Tr?ger S35 T0.6	
30910.007	10714227	Condenser	Verdichter	
30910.008	10912933	Feed plate complete	Speisemulde komplett	
30910.008	10974385	Feed plate complete V2	Speisemulde komplett V2	
30910.009	10717086	Lever V4	Hebel V4	
30910.010	10258912	Cyl.screw M5x12	Zyl.Schraube M5x12	
30910.011	10936171	Pressure spring 1.4x13.6x63	Druckfeder 1.4x13.6x63	
30910.013	10258913	Cyl.screw M5x16	Zyl.Schraube M5x16	
30910.014	10577986	Step motor complete 17PM	Schrittmotor komplett 17PM	
30910.015	10778557	Pressure spring 1x9.8x29	Druckfeder 1x9.8x29	
30910.016	10949831	Retaining lever complete V2	Arretierhebel komplett V2	
30910.017	10356259	Locking washer 6	Sicherungsscheibe 6	
30910.018	10915599	Cover V2	Abdeckung V2	
30910.019	10259209	Threaded pin M5x8-45H	Gewindestift M5x8-45H	
30910.020	10662958	Swivel stud	Schwenkzapfen	

R 36

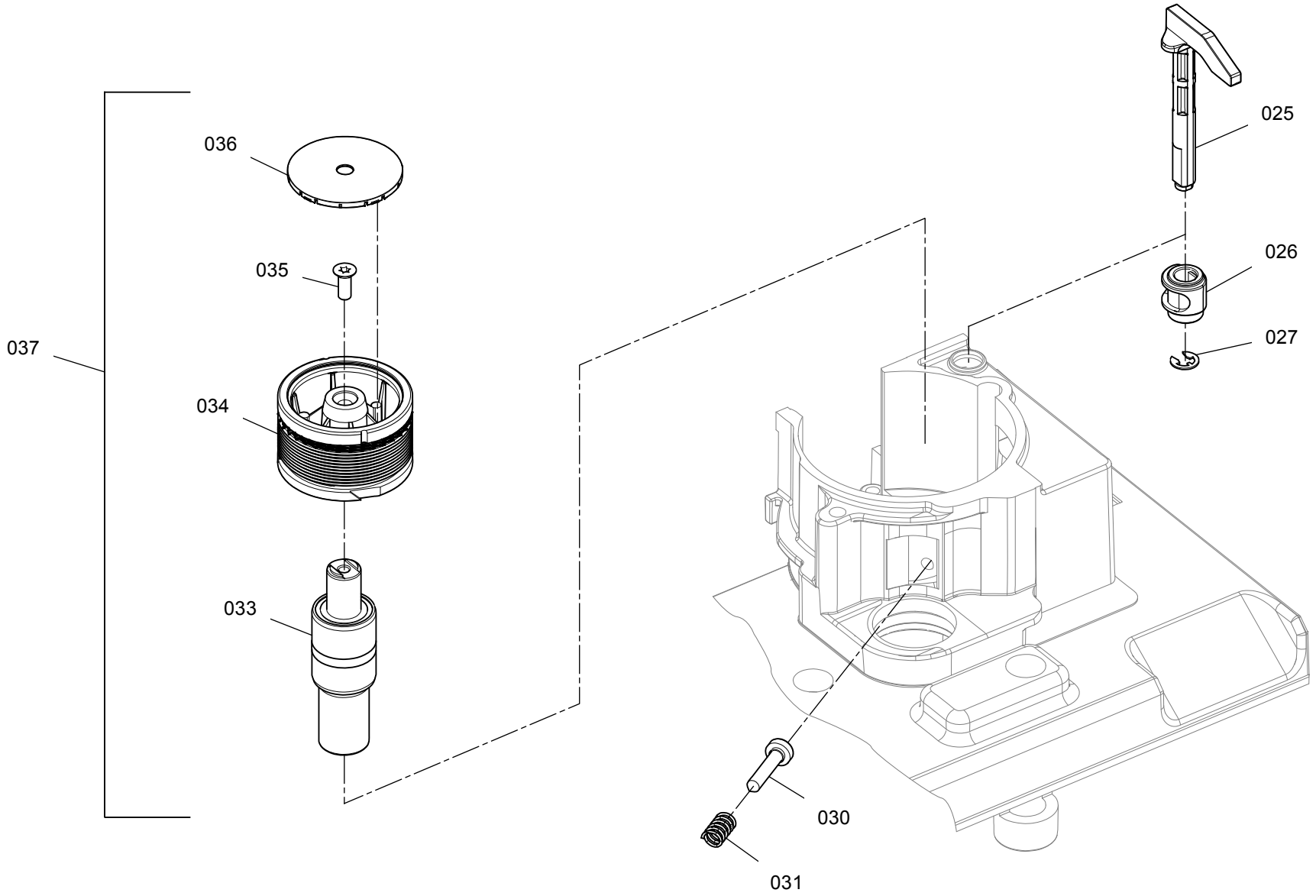

30910

RXX_3_09_10_201.cgm

Catalogue no. Katalog-Nr.	Part No. Material-Nr.	Part description en	Material-Bezeichnung de	Comment Bemerkung
30910.025	10982800	Locking lever SDD	Klemmhebel SDD	
30910.026	10709195	Cam V4	Nocken V4	
30910.027	10258869	Locking washer 5	Sicherungsscheibe 5	
30910.030	10763231	Needle	Nadel	
30910.031	10724671	Pressure spring 0.8x5.6x12	Druckfeder 0.8x5.6x12	
30910.033	10935919	Bearing complete V2	Lager komplett V2	
30910.034	11021683	Opening roller body S40-DN-64 v2 H	Aufl?sewalzenk?rper S40-DN-64 v2 H	
30910.035	10439348	Screw M6x16 ISO 14581 8.8 Zn	Schraube M6x16 ISO 14581 8.8 Zn	
30910.036	10663112	End cover	Abschlussdeckel	
30910.037	11021682	Opening roller complete S40-DN-64 v2 H	Aufl?sewalze komplett S40-DN-64 v2 H	

R 36

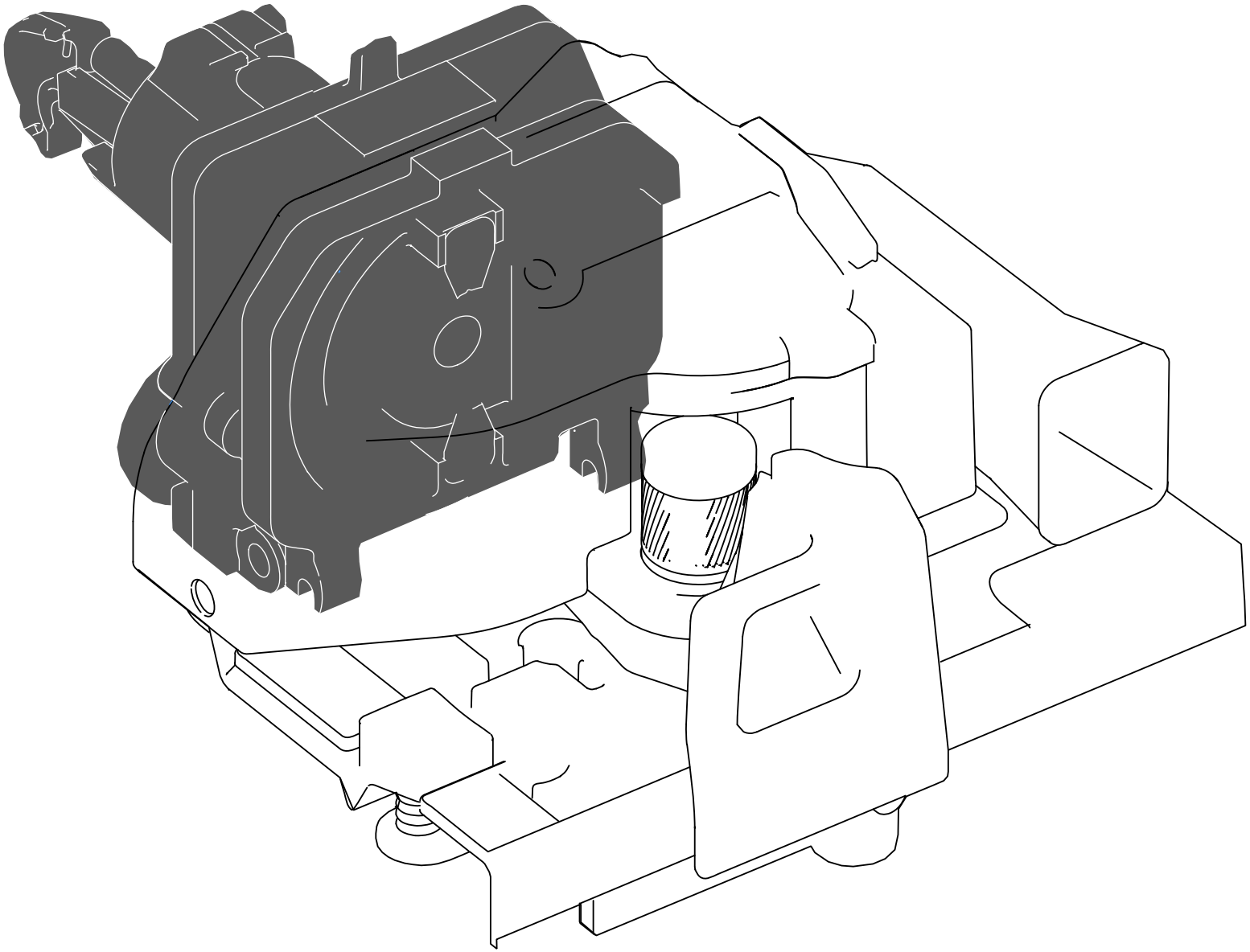

30920

Navi_3_09_20_01.cgm

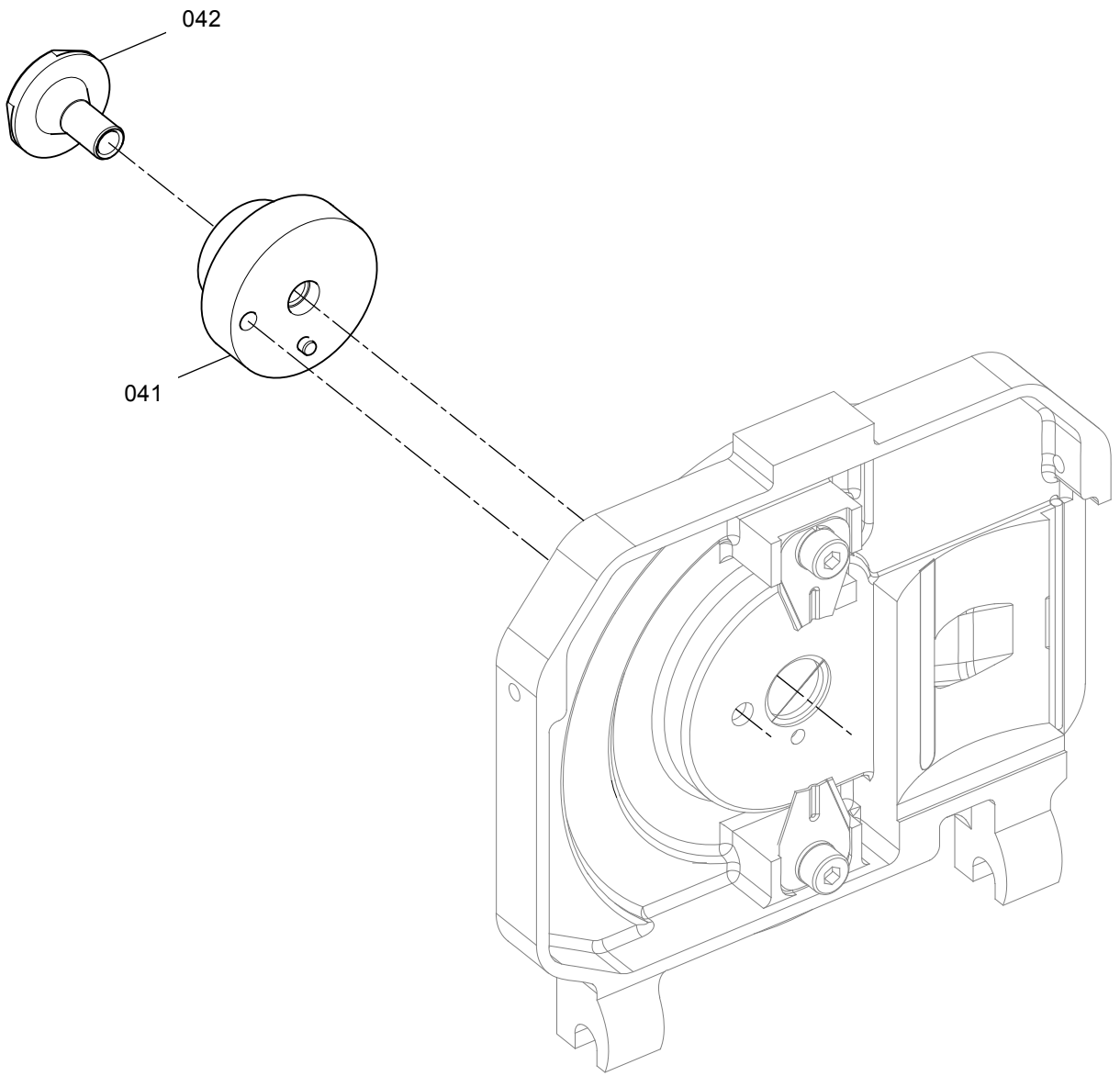
042
041

58361

Catalogue no. Katalog-Nr.	Part No. Material-Nr.	Part description en	Material-Bezeichnung de	Comment Bemerkung
30920.041	10912804	Channel Insert lettering S5	Channel Insert Beschriftung S5	
30920.042	10828118	Navel S-R7RS	Abzugsd?se S-R7RS	

R 36

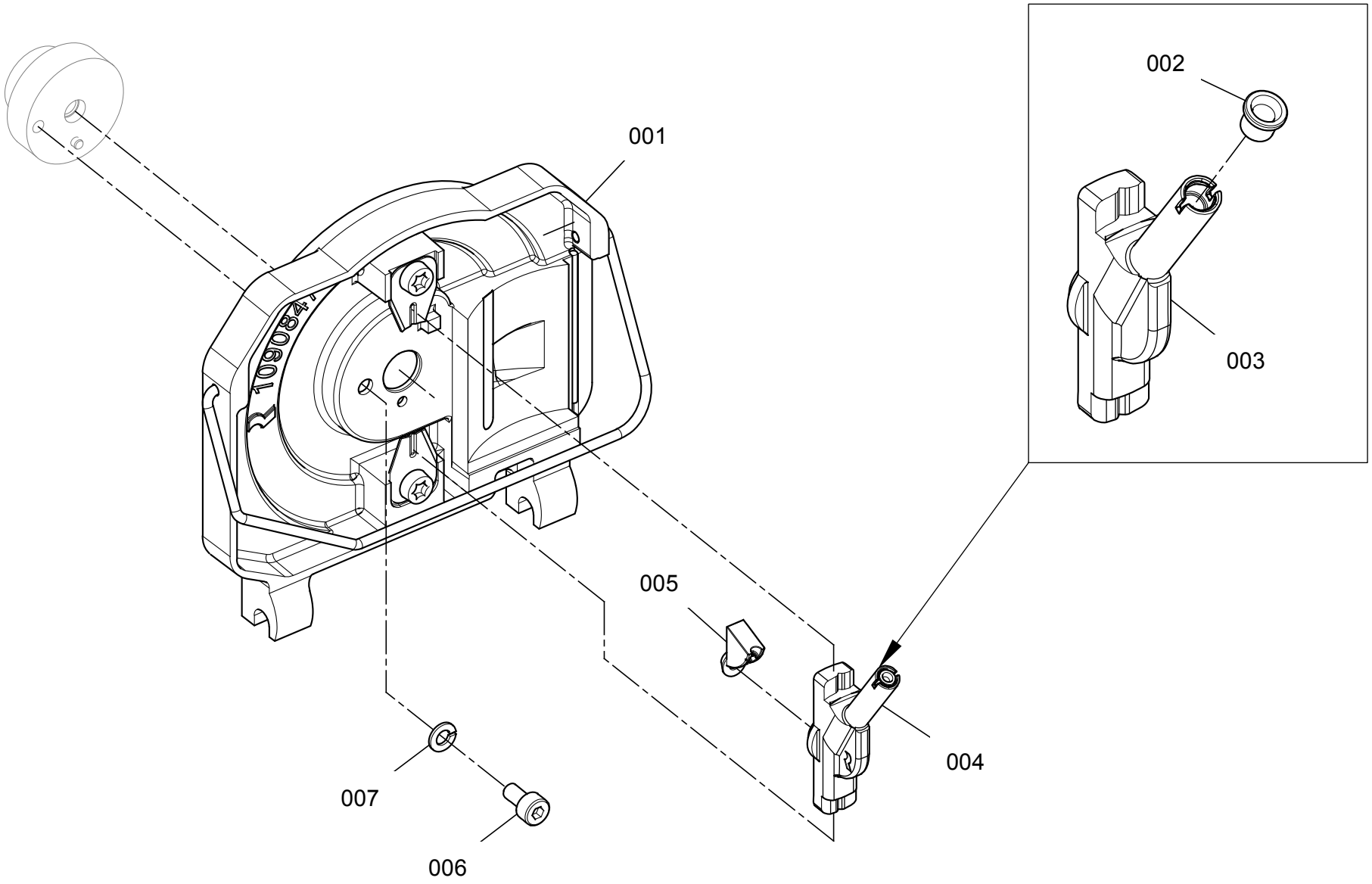

30920

RXX_3_09_20_101.cgm

Catalogue no. Katalog-Nr.	Part No. Material-Nr.	Part description en	Material-Bezeichnung de	Comment Bemerkung
30920.001	10908460	Channel plate complete S5 Zn	Kanalplatte komplett S5 Zn	
30920.002	954.9345	Flange eye	Bund?se	
30920.003	10723928	Pipe bend	Rohrbogen	
30920.004	10725971	Pipe bend complete	Rohrbogen komplett	
30920.005	10693108	Segment pink "U"	Segment rosa "U"	
30920.005	UE4931302	Segment TWISTFIX	Segment TWISTFIX	
30920.006	10258900	Cyl.screw M4x8	Zyl.Schraube M4x8	
30920.007	10356143	Spring ring 4	Federring 4	
30920.008	10667941	Spring sheet	Feder Blech	
30920.009	10908471	Channel plate polished S5 Zn	Kanalplatte poliert S5 Zn	
30920.010	10789160	Spring bow	Federb?gel	
30920.011	10526327	Oval head screw M4x8 St	Linsenschraube M4x8 St	
30920.012	10667925	Seal	Dichtung	

R 36

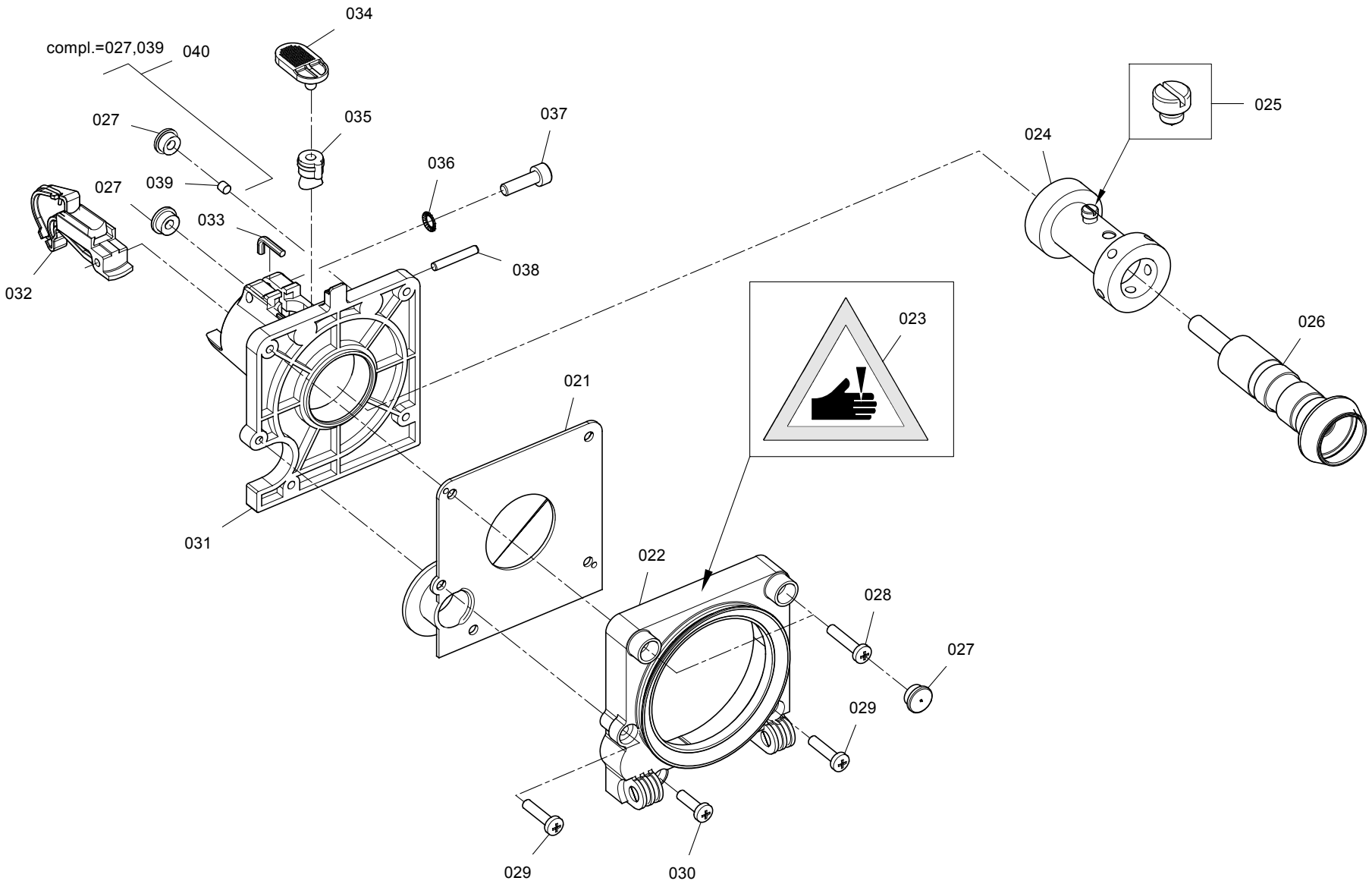

30920

RXX_3_09_20_201.cgm

Catalogue no. Katalog-Nr.	Part No. Material-Nr.	Part description en	Material-Bezeichnung de	Comment Bemerkung
30920.021	10663619	Spiral housing cover	Spiralgeh?usedeckel	
30920.022	10925684	Rotor housing complete	Rotorgeh?use komplett	
30920.023	10852082	Safety decal S35	Arbeitssicherheitsschild S35	
30920.024	U90310102	Spring insert PLC 83-18-6	Federeinlage PLC 83-18-6	
30920.025	UA3975523	Screw PU 83-15	Schraube PU 83-15	
30920.026	10943296	Rotor spindle S533/U-D	Rotor Spindel S533/U-D	
30920.027	10662961	Stop	Anschlag	
30920.028	10543833	Oval head screw M5x25	Linsenschraube M5x25	
30920.029	10543832	Oval head screw M5x22	Linsenschraube M5x22	
30920.030	10543831	Oval head screw M5x18	Linsenschraube M5x18	
30920.031	10971878	Bearing body machined v2	Lagerk?rper bearbeitet v2	
30920.032	10924771	Brake complete	Bremse komplett	
30920.033	10669633	Round cord	Rundschnur	
30920.034	10662947	Cover	Abdeckung	
30920.035	10662960	Nipple PT513	Nippel PT513	
30920.036	10258859	Locking washer 6.4/10	Sicherungsscheibe 6.4/10	
30920.037	10259461	Cyl.screw M6x20	Zyl.Schraube M6x20	
30920.038	10544048	Cylindrical pin 4p6x26	Zylinderstift 4p6x26	
30920.039	10690853	Magnet 5x5	Magnet 5x5	
30920.040	10766690	Magnet stop	Magnetanschlag	

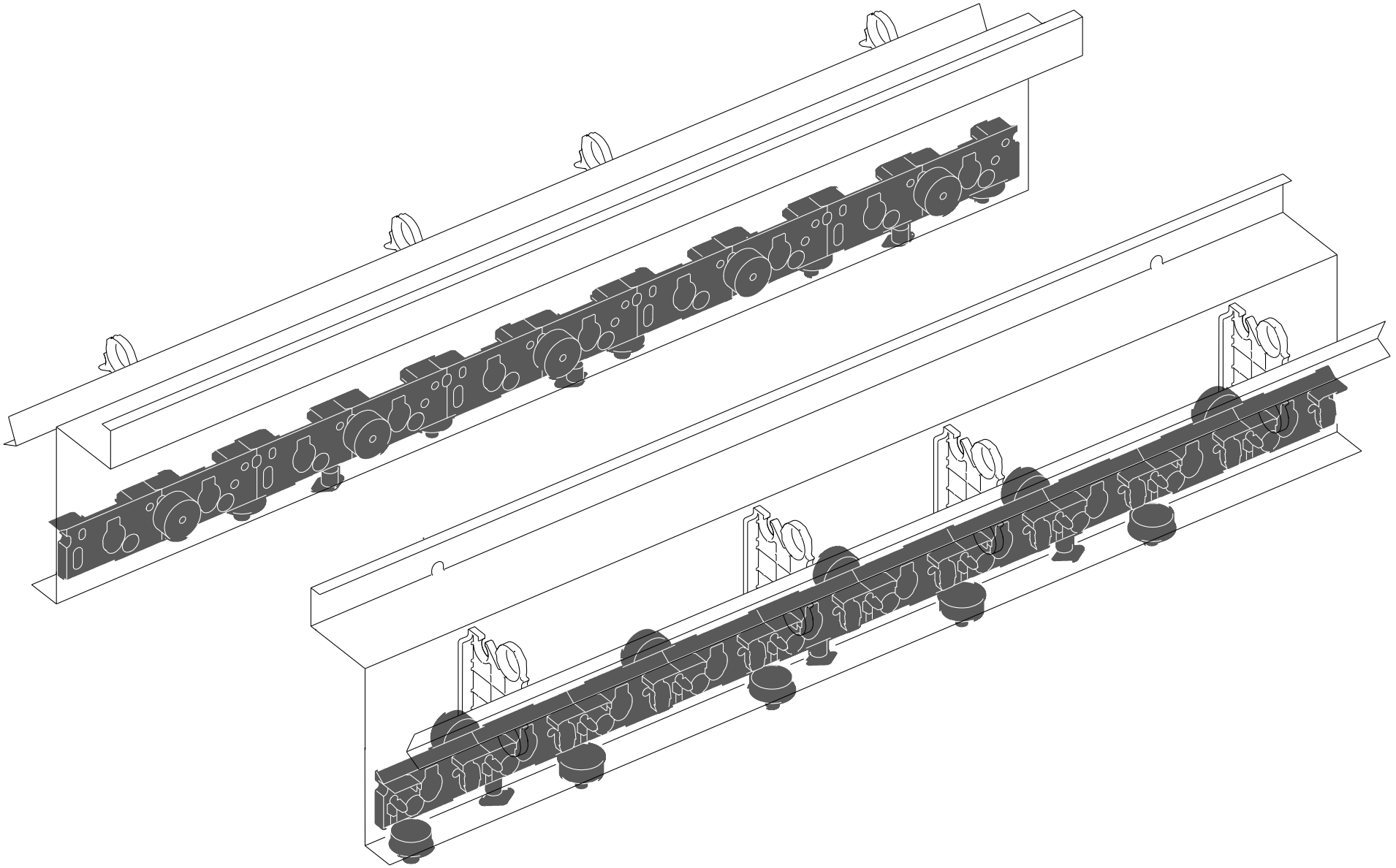

Navi_3_27_01.cgm

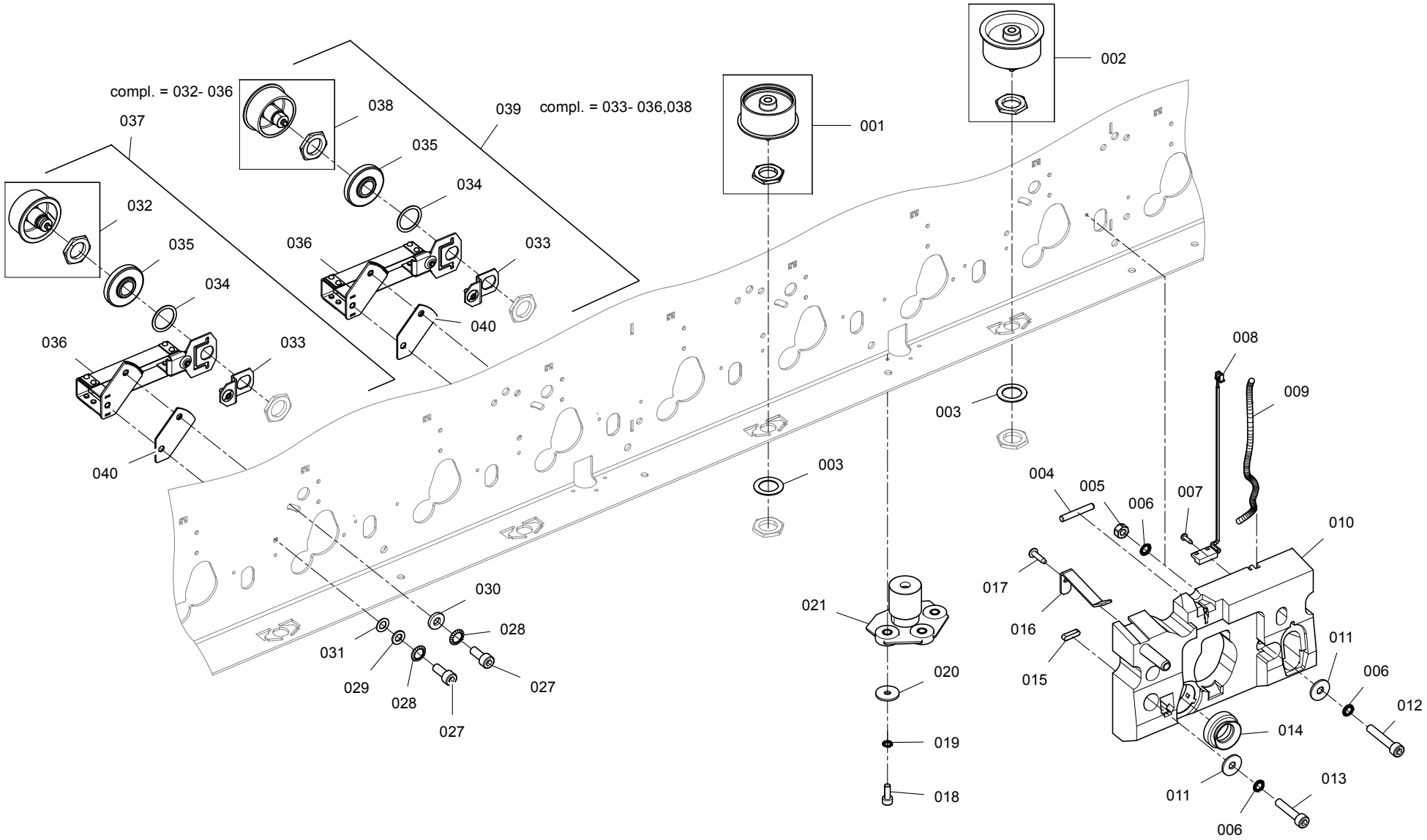

RXX_3_27_101.cgm

Catalogue no. Katalog-Nr.	Part No. Material-Nr.	Part description en	Material-Bezeichnung de	Comment Bemerkung
327.001	10767800	Guiding roller complete II. - Al	F?hrungsrolle komplett II. - Al	
327.002	10767795	Guiding roller complete I. - Al	F?hrungsrolle komplett I. - Al	
327.003	10740100	Fan shaped disc A25	F?cherscheibe A25	
327.004	10451792	Cylindrical pin 6m6x40	Zylinderstift 6m6x40	
327.005	10431759	Hexagon nut M6-8	6kt-Mutter M6-8	
327.006	10259659	Locking washer 6.4/10	Sicherungsscheibe 6.4/10	
327.007	10579601	Screw for plastic KA35x12	PT-Linsenschraube KA35x12	
327.008	10690377	Cable 126 - SU	Kabel 126 - SU	
327.009	10724128	Cable 124 - FEED	Kabel 124 - FEED	
327.009	10823371	Cable 124	Kabel 124	
327.010	10921465	Plate SU R35 V2	Platte SU R35 V2	
327.011	10258855	Washer 6.4-St-100HV	Scheibe 6.4-St-100HV	
327.012	10258930	Cyl.screw M6x35	Zyl.Schraube M6x35	
327.013	10258929	Cyl.screw M6x30	Zyl.Schraube M6x30	
327.014	10934169	Seal collar	Dichtmanschette	
327.015	10527842	Parallel key 5x5x20-C45+C	Passfeder 5x5x20-C45+C	
327.016	10713504	Loading bracket	Belastungslasche	
327.017	10550363	Screw for plastic KA50x20-H	PT-Linsenschraube KA50x20-H	
327.018	10258828	Cyl.screw M6x16	Zyl.Schraube M6x16	
327.019	10258859	Locking washer 6.4/10	Sicherungsscheibe 6.4/10	
327.020	10696505	Washer	Scheibe	
327.021	10696332	Tension roller complete	Spannrolle komplett	
327.027	10258948	Cyl.screw M8x20	Zyl.Schraube M8x20	
327.028	10461551	Locking washer 8.4/13	Sicherungsscheibe 8.4/13	
327.029	10580160	Washer 8.4-St-200HV	Scheibe 8.4-St-200HV	
327.030	UE7255210	Washer II.	Scheibe II.	
327.031	10356405	Fan shaped disc A8.4	F?cherscheibe A8.4	
327.032	10768280	Guiding roller II.	F?hrungsrolle II.	
327.033	UA4145971	Console complete	Konsole komplett	

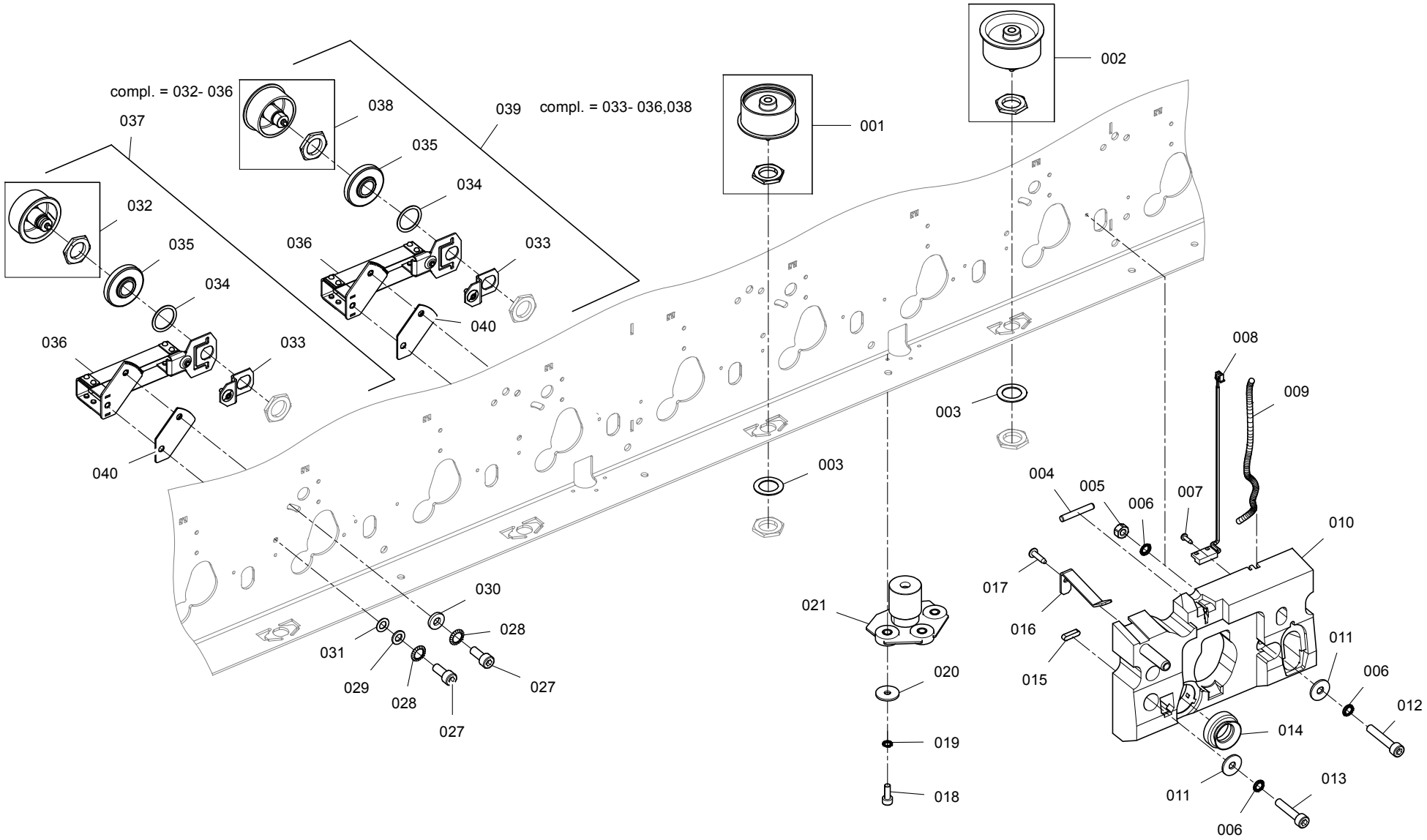

RXX_3_27_101.cgm

Catalogue no. Katalog-Nr.	Part No. Material-Nr.	Part description en	Material-Bezeichnung de	Comment Bemerkung
327.034	10492033	Washer DIA 24.2 /DIA 30 / 1	Scheibe DIA 24.2 /DIA 30 / 1	
327.035	UA4145588	Cam roller housing	Kurvenrollengeh?use	
327.036	10768385	Bracket complete	Tr?ger komplett	
327.037	10768301	Guiding roller complete I.	F?hrungsrolle komplett I.	
327.038	10768302	Guiding roller I.	F?hrungsrolle I.	
327.039	10768303	Guiding roller complete II.	F?hrungsrolle komplett II.	
327.040	10955479	Distance plate R35 - V2	Distanzplatte R35 - V2	

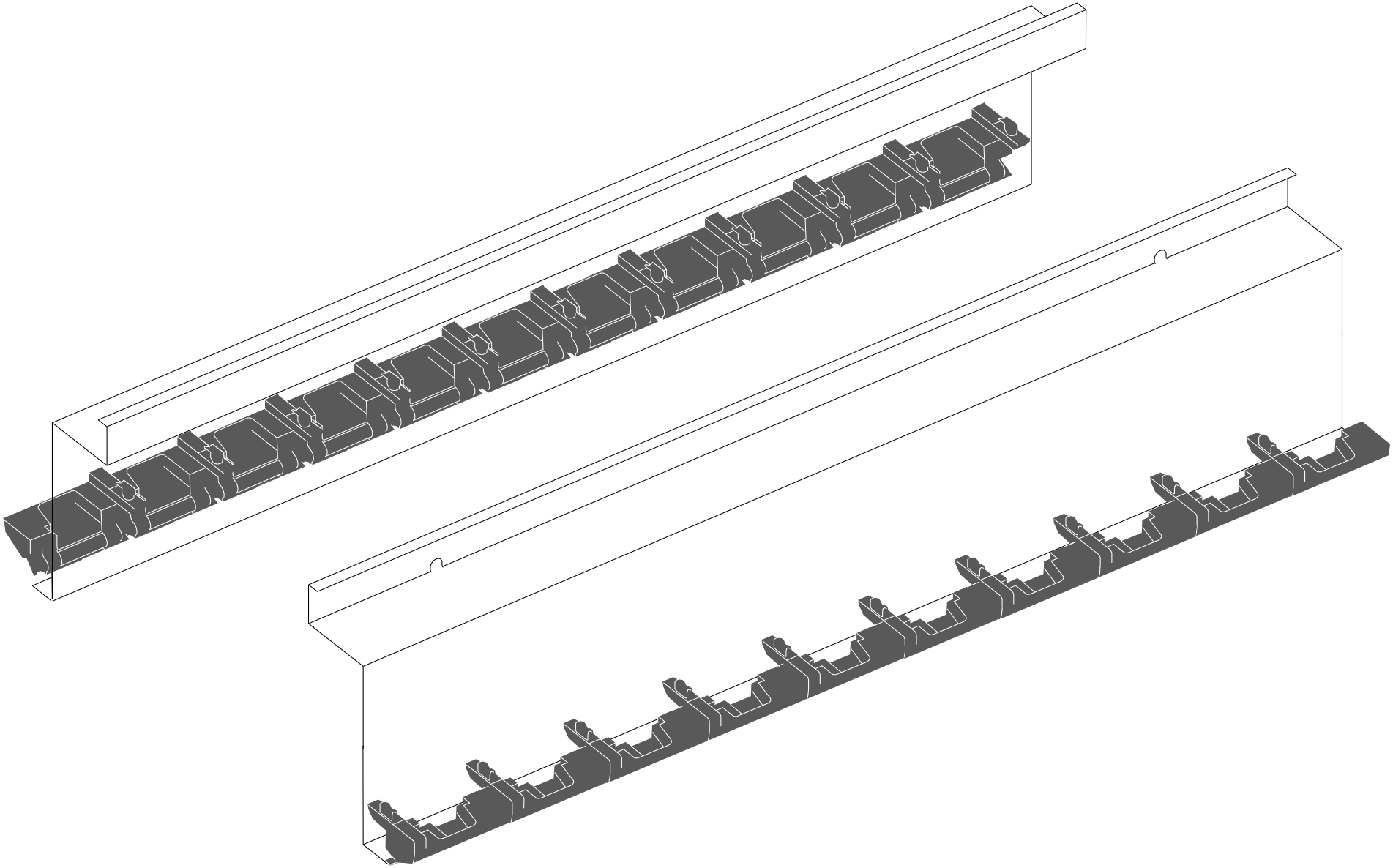

Navi_3_30_01.cgm

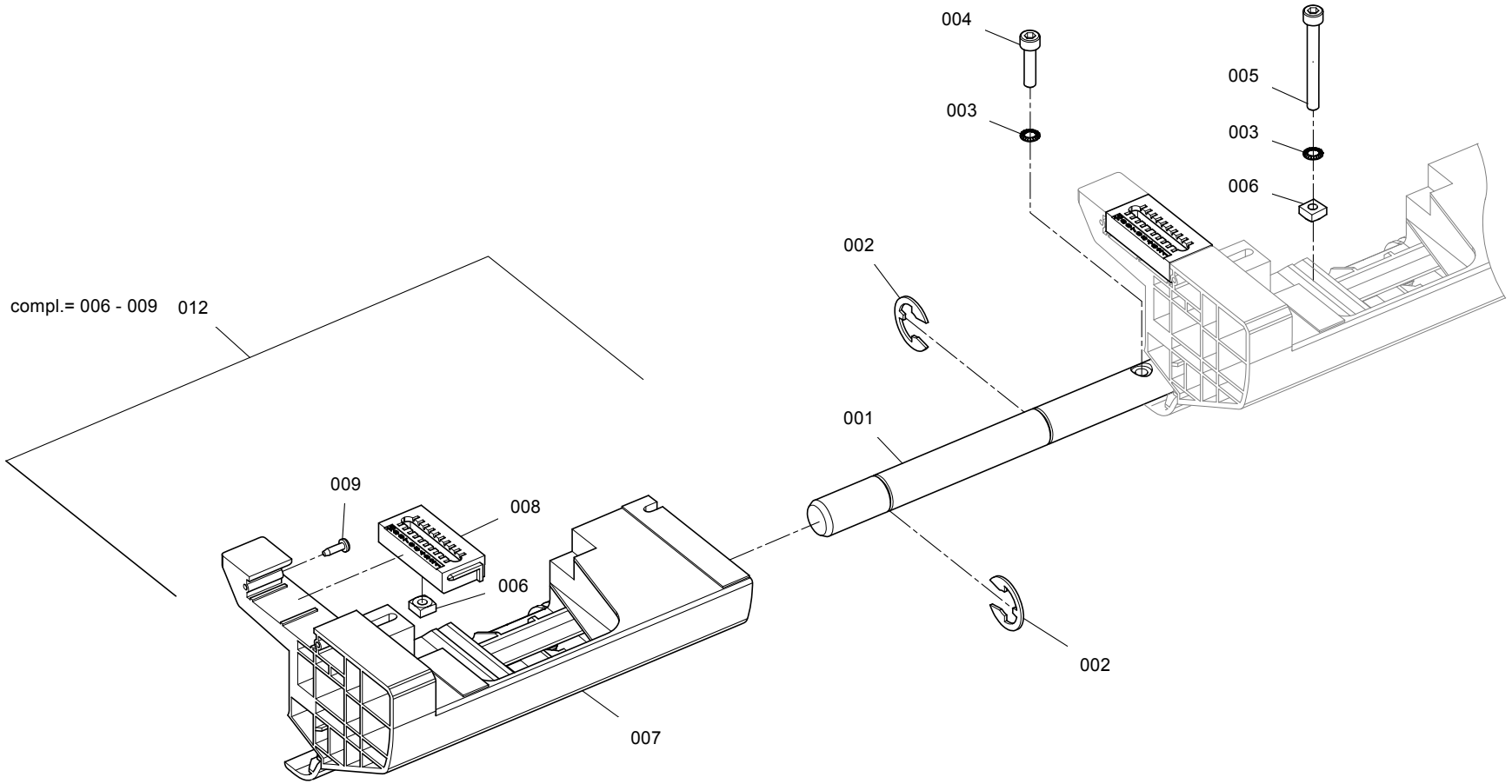
004
003
005
003
006
002
compl.= 006 - 009
012
001
009
008
006
002
007

Catalogue no. Katalog-Nr.	Part No. Material-Nr.	Part description en	Material-Bezeichnung de	Comment Bemerkung
330.001	10761211	Stick	Stab	
330.002	8504192	Locking washer 15	Sicherungsscheibe 15	
330.003	10258859	Locking washer 6.4/10	Sicherungsscheibe 6.4/10	
330.004	10258928	Cyl.screw M6x25	Zyl.Schraube M6x25	
330.005	10258937	Cyl.screw M6x60	Zyl.Schraube M6x60	
330.006	10126422	Square nut M6-5	4kt-Mutter M6-5	
330.007	10759875	Spinning unit support	Spinneinheit Abst?tzung	
330.008	10756281	Knife holder scale	Messerhalter Skala	
330.009	10579601	Screw for plastic KA35x12	PT-Linsenschraube KA35x12	
330.012	10980173	Spinning unit support SDD	Spinneinheit Abst?tzung SDD	

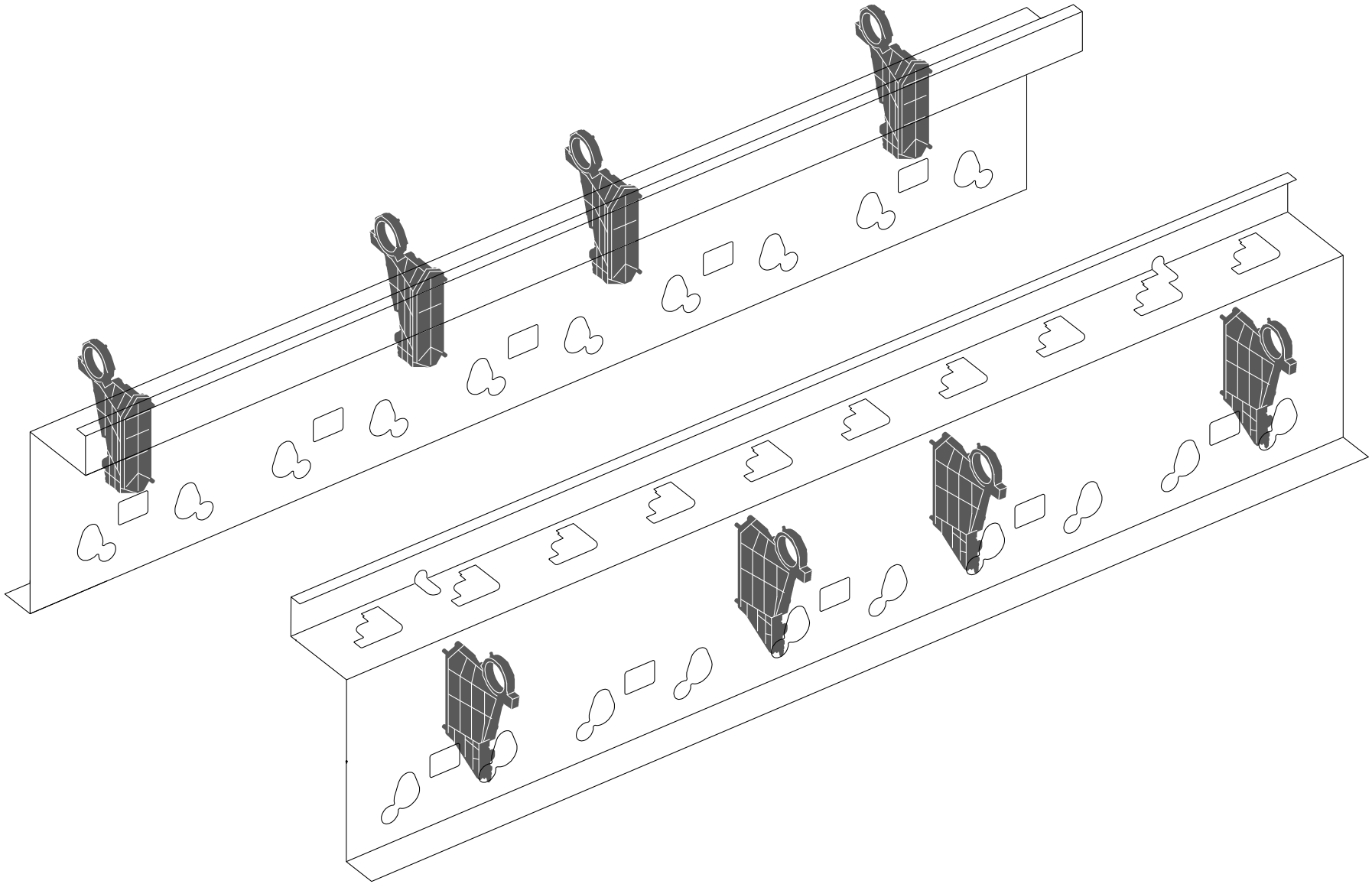

Navi_3_33_B01.cgm

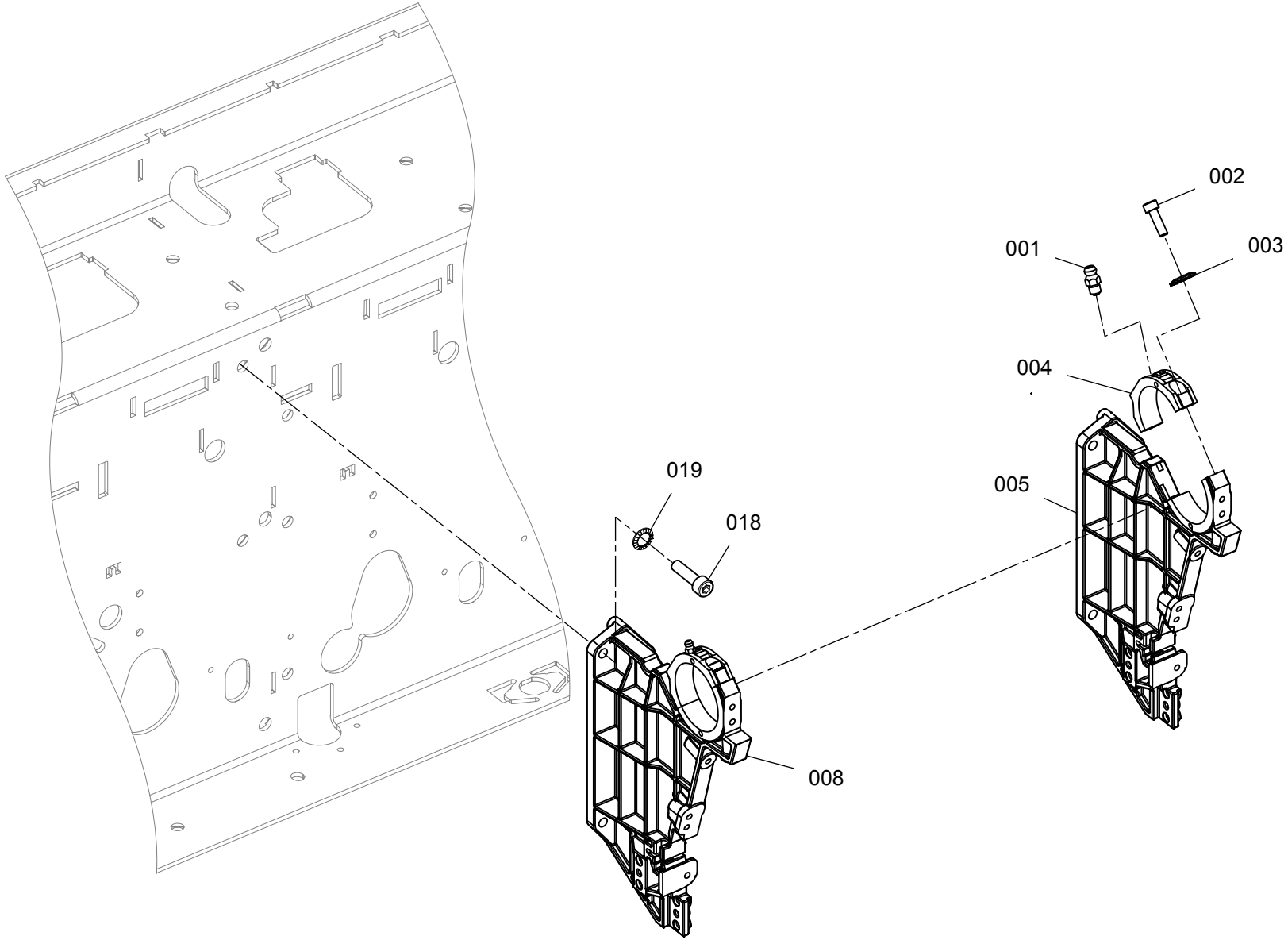

RXX_3_33_B101.cgm

58361

Catalogue no. Katalog-Nr.	Part No. Material-Nr.	Part description en	Material-Bezeichnung de	Comment Bemerkung
333.001	10437501	Cone grease nipple A-M6 keg	Kegelschmiernippel A-M6 keg	
333.002	10259461	Cyl.screw M6x20	Zyl.Schraube M6x20	
333.003	10258859	Locking washer 6.4/10	Sicherungsscheibe 6.4/10	
333.004	UE7340606	Lid top	Deckel oben	
333.005	10904266	Holder shaft	Halter Welle	
333.008	10934413	Shaft holder complete SDD	Wellenhalter komplett SDD	
333.018	10258950	Cyl.screw M8x30	Zyl.Schraube M8x30	
333.019	10461551	Locking washer 8.4/13	Sicherungsscheibe 8.4/13	

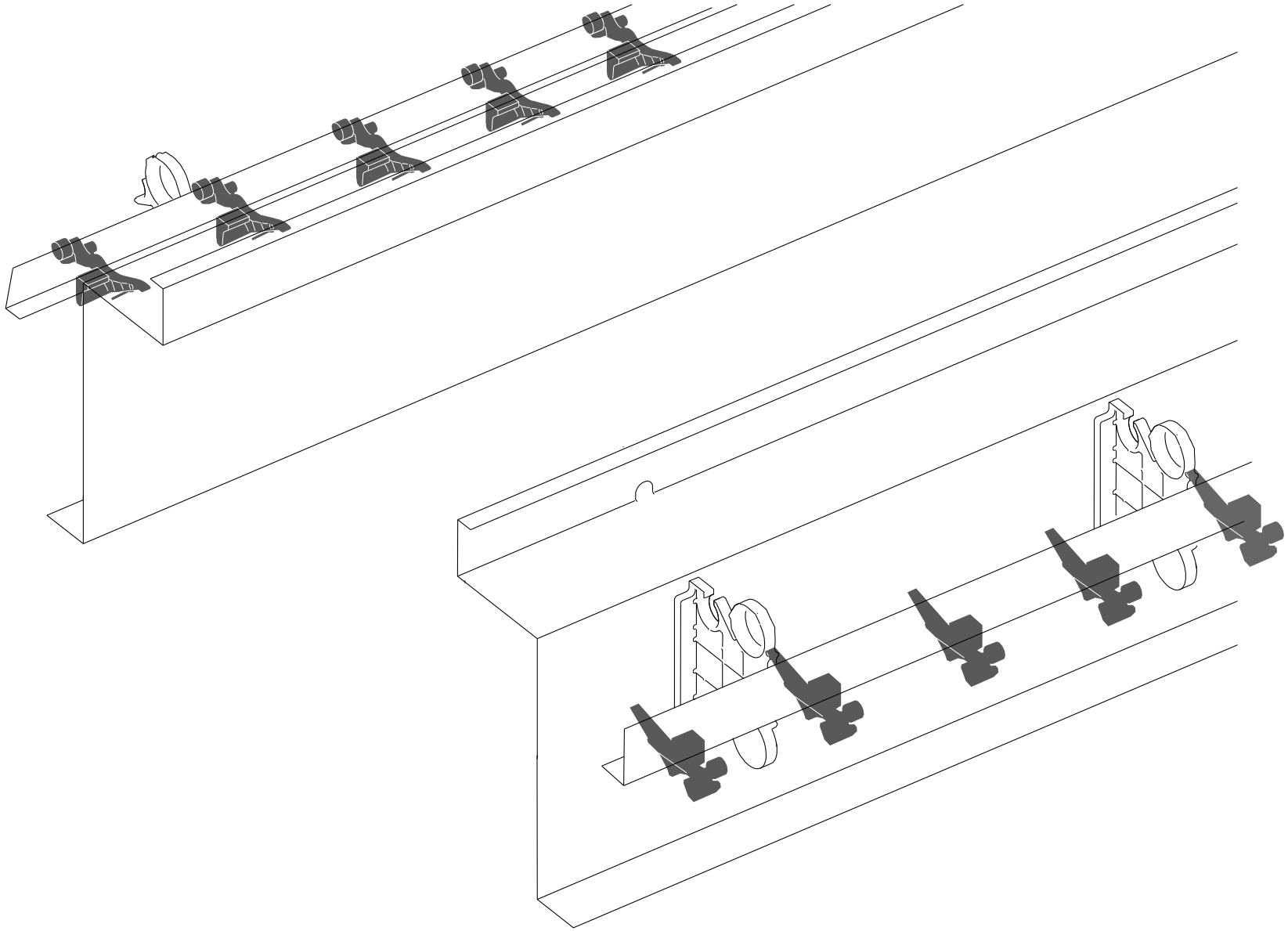

Navi_3_36_01.cgm

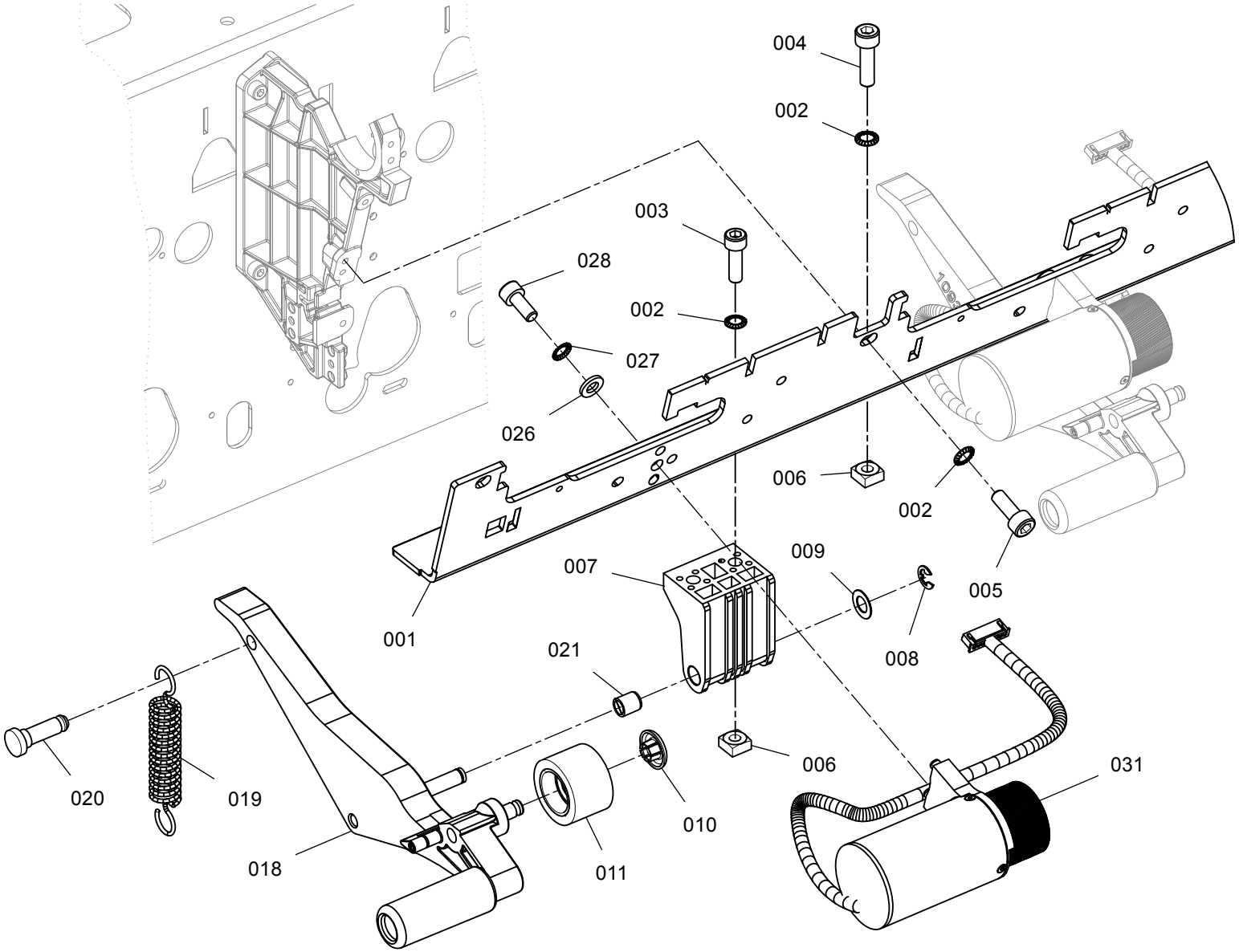

RXX_3_36_B101.cgm

Catalogue no. Katalog-Nr.	Part No. Material-Nr.	Part description en	Material-Bezeichnung de	Comment Bemerkung
336.001	10936602	Beam L cyl R36	Balken L cyl R36	
336.002	10258859	Locking washer 6.4/10	Sicherungsscheibe 6.4/10	
336.003	10259461	Cyl.screw M6x20	Zyl.Schraube M6x20	
336.004	10258927	Cyl.screw M6x22	Zyl.Schraube M6x22	
336.005	10258828	Cyl.screw M6x16	Zyl.Schraube M6x16	
336.006	10126422	Square nut M6-5	4kt-Mutter M6-5	
336.007	10708251	Holder	Halter	
336.008	10258869	Locking washer 5	Sicherungsscheibe 5	
336.009	10494341	Shim washer 8/14x0.5	Passscheibe 8/14x0.5	
336.010	11031641	Covering brace	Verkleidung Verstrebung	
336.011	10669785	Take-up roller complete	Abzugswalze komplett	
336.018	11049544	Lever complete SDD	Hebel komplett SDD	
336.019	10843425	Tension spring V2 SDD	Zugfeder V2 SDD	
336.020	10709900	Tappet 3	Zapfen 3	
336.021	10825494	Bushing	Buchse	
336.026	10456142	Washer 6.4-St-200HV	Scheibe 6.4-St-200HV	
336.027	10259659	Locking washer 6.4/10	Sicherungsscheibe 6.4/10	
336.028	10356290	Cyl.screw M6x14	Zyl.Schraube M6x14	
336.031	11035374	Motor complete SDD	Motor komplett SDD	

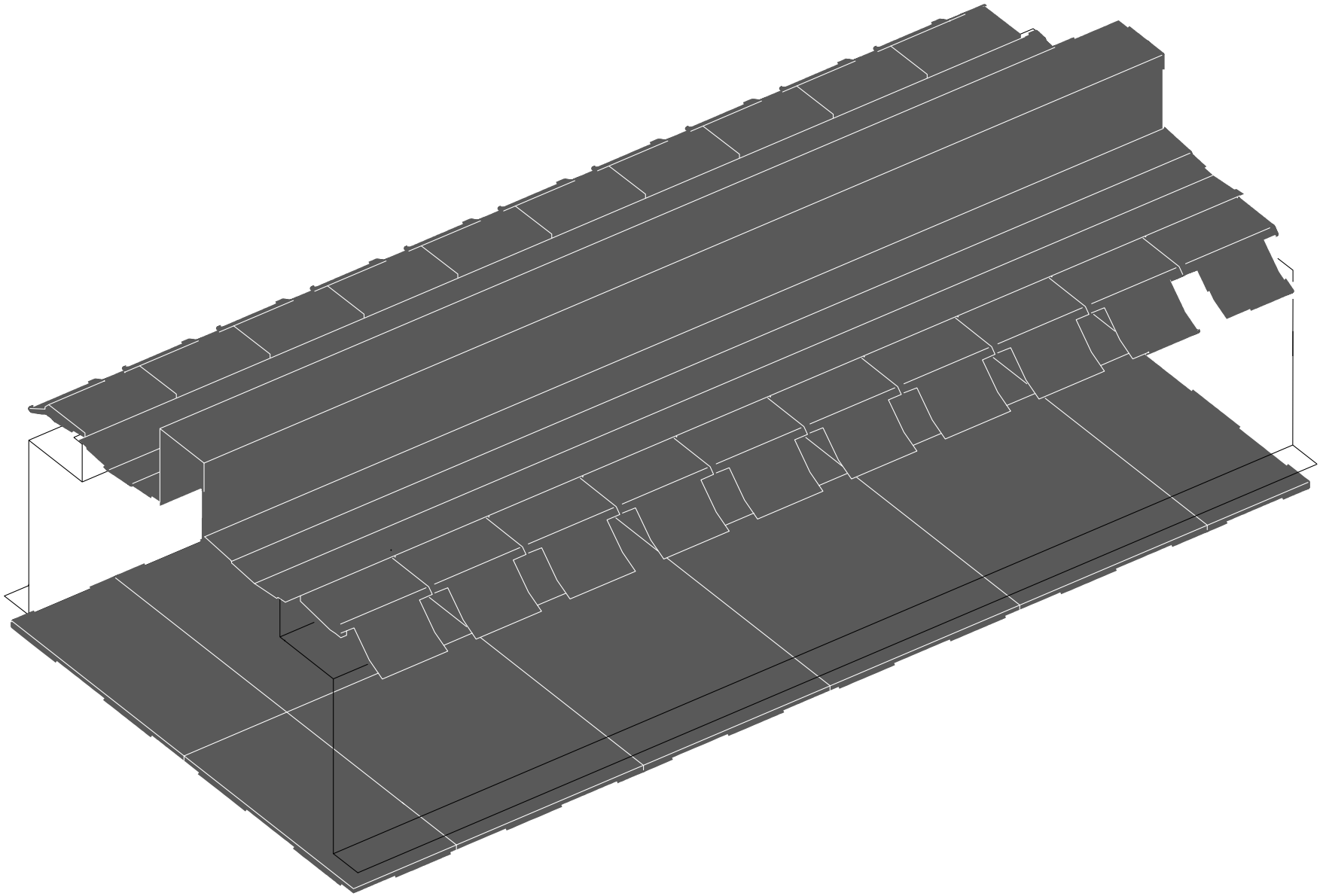

Navi_3_39_01.cgm

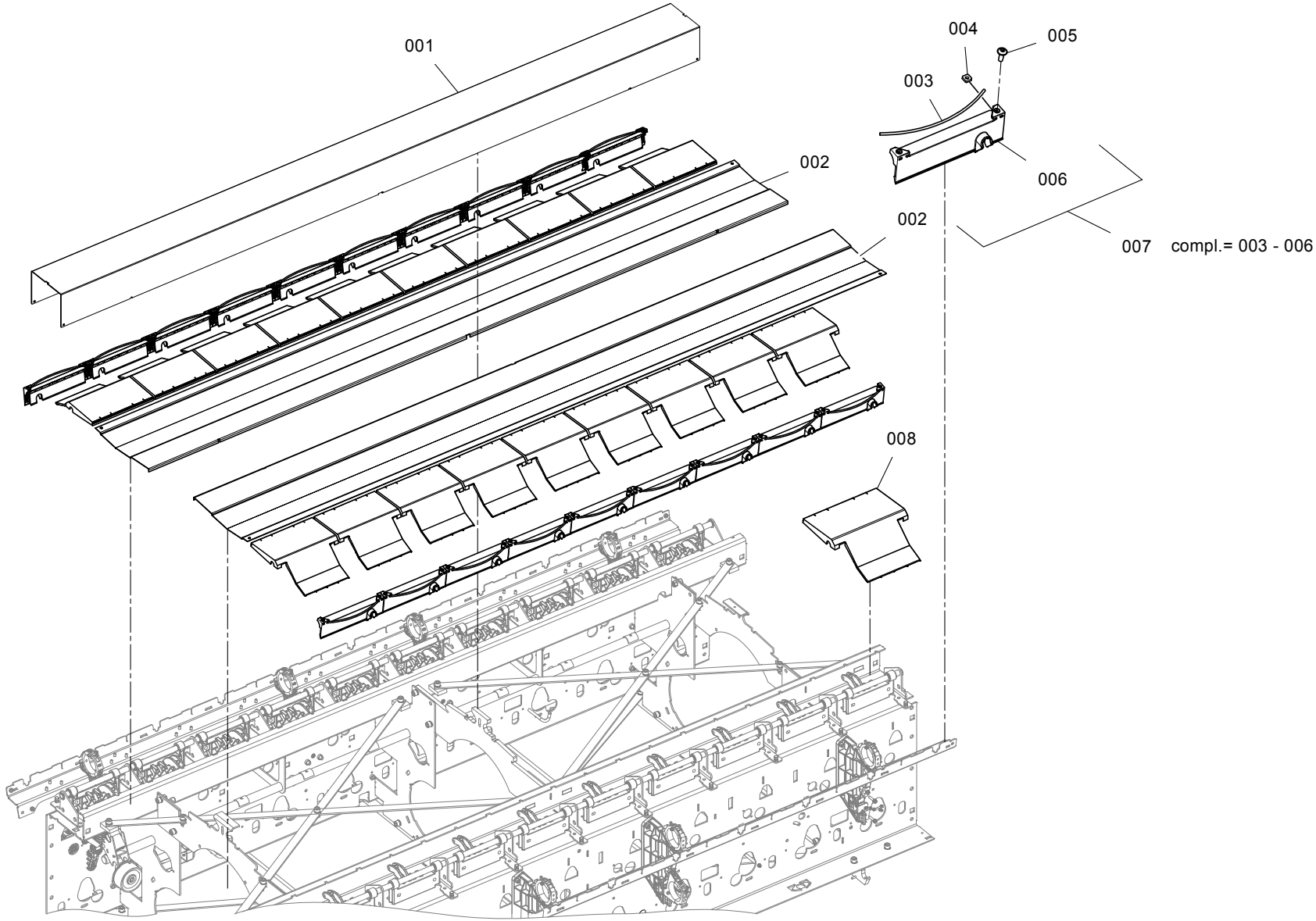

RXX_3_39_101.cgm

Catalogue no. Katalog-Nr.	Part No. Material-Nr.	Part description en	Material-Bezeichnung de	Comment Bemerkung
339.001	10902120	Channel covering	Kanal Verkleidung	
339.002	10690105	Rest band conveyor	St?tze Transportband	
339.003	10971611	Bend 4 / 236	Bogen 4 / 236	
339.004	10720471	Square nut M4-04	4kt-Mutter M4-04	
339.005	10507523	Oval head screw flange M4x12	Linsenschraube Flansch M4x12	
339.006	10720299	Cover traversing	Abdeckung Changierung	
339.007	10983632	Cover traversing	Abdeckung Changierung	
339.008	10804060	Slide package holder	Rutsche Spulenhalter	

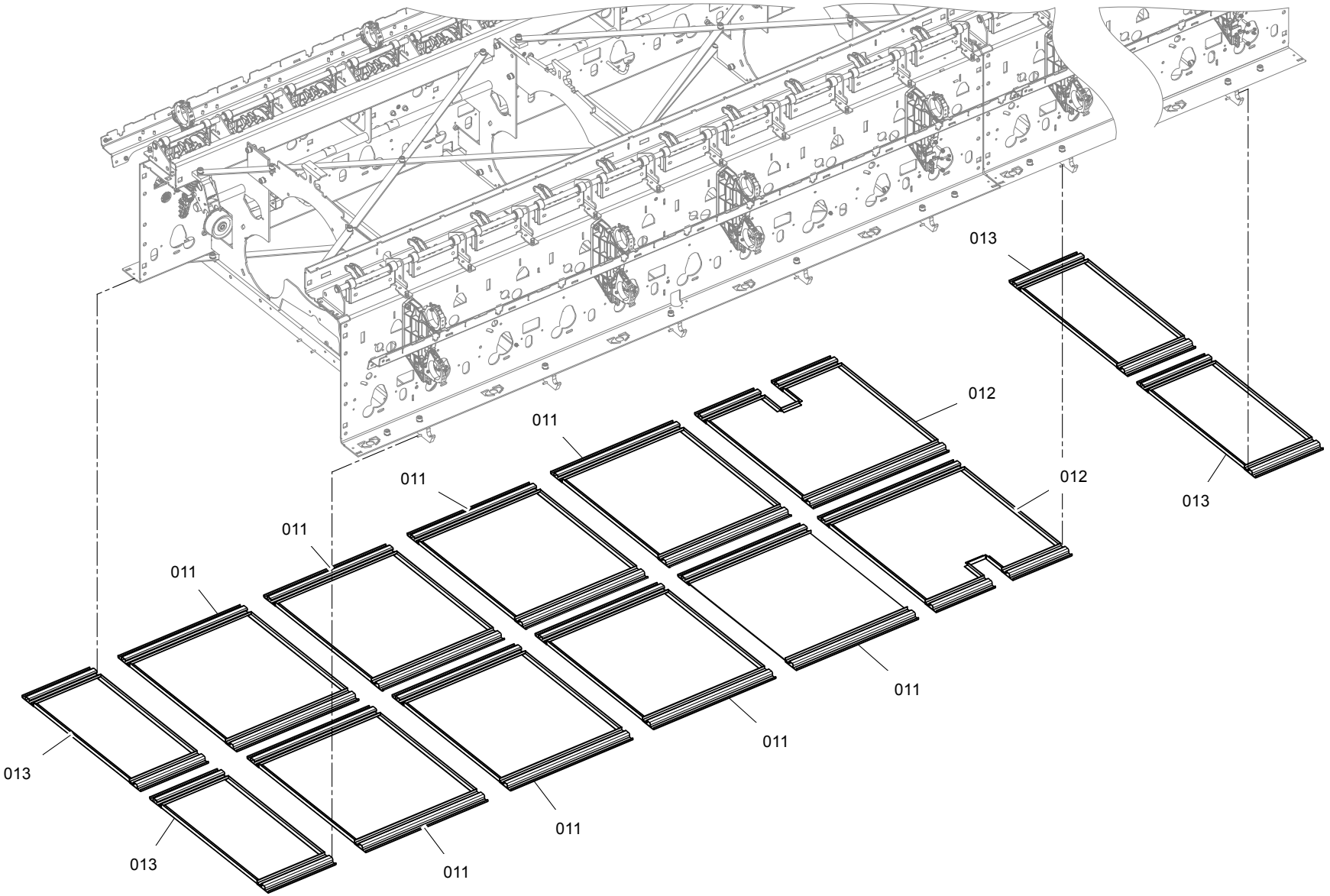
013
012
011
011
012
013
011
011
011
011
011
013
013
011

58361

Catalogue no. Katalog-Nr.	Part No. Material-Nr.	Part description en	Material-Bezeichnung de	Comment Bemerkung
339.011	11036253	Cover section PP+UV	Abdeckung Sektion PP+UV	
339.012	11036263	Cover section PP+UV	Abdeckung Sektion PP+UV	
339.013	11036264	Cover section 247 PP+UV	Abdeckung Sektion 247 PP+UV	

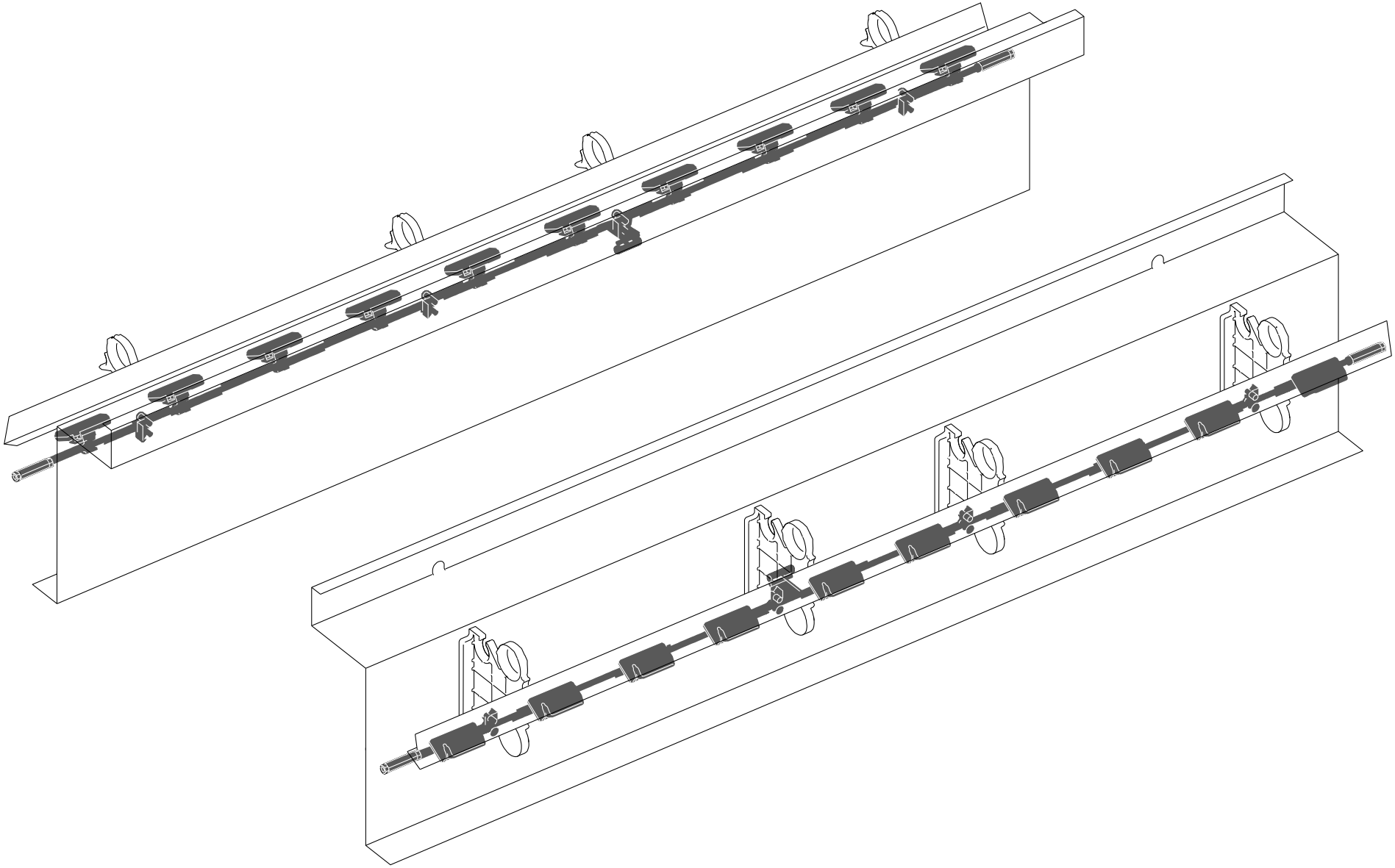

Navi_3_42_B01.cgm

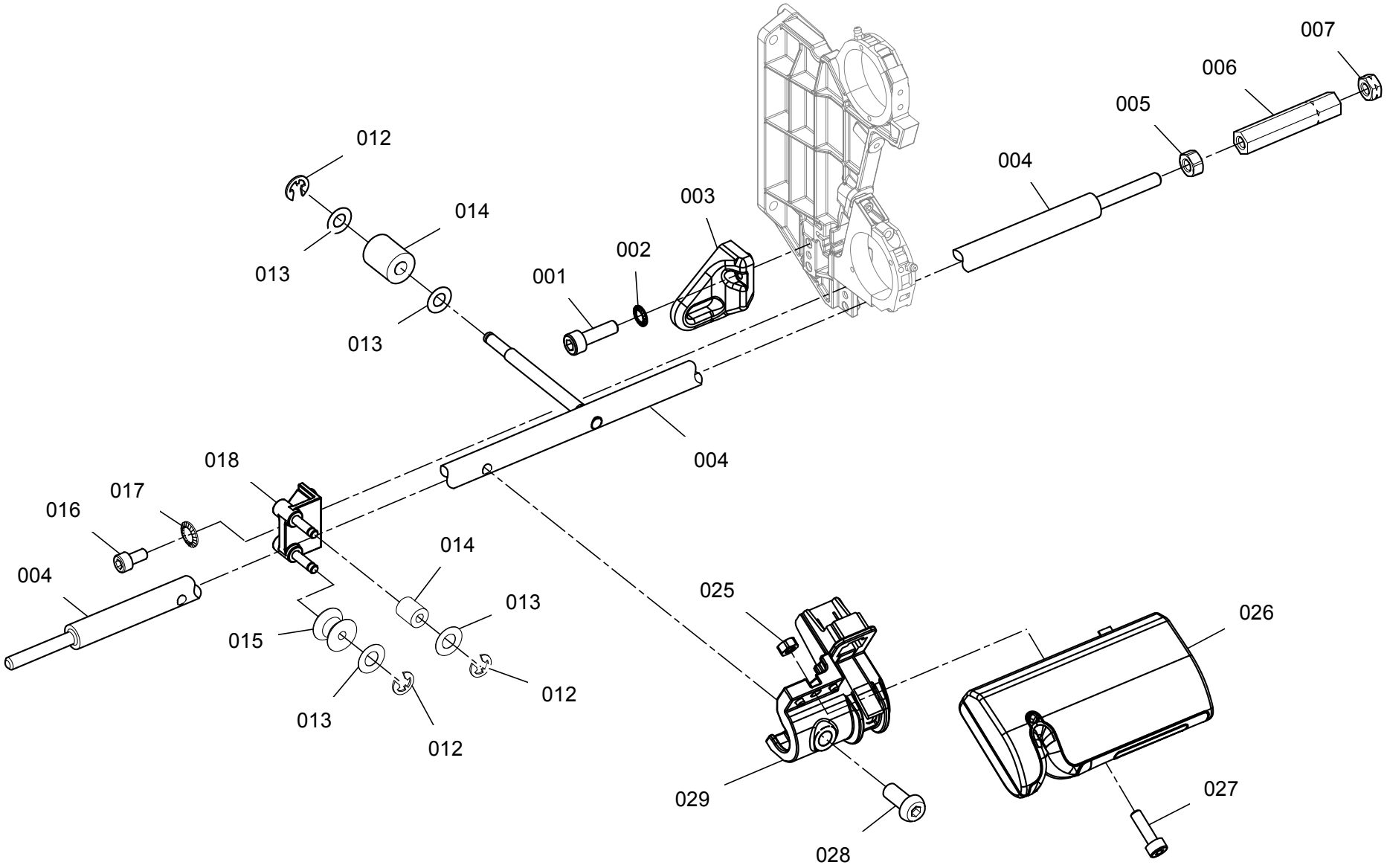

RXX_3_42_B101.cgm

Catalogue no. Katalog-Nr.	Part No. Material-Nr.	Part description en	Material-Bezeichnung de	Comment Bemerkung
342.001	10259461	Cyl.screw M6x20	Zyl.Schraube M6x20	
342.002	10258859	Locking washer 6.4/10	Sicherungsscheibe 6.4/10	
342.003	10761692	Guide support traversing	F?hrungshalter Changierung	
342.004	11043838	Traversing rod Q10	Changierung Stange Q10	
342.005	10909038	Hexagon nut - M6LH	6kt-Mutter - M6LH	
342.006	10959511	Hexagon nut short - M6	6kt-Mutter kurz - M6	
342.007	10431759	Hexagon nut M6-8	6kt-Mutter M6-8	
342.012	10459959	Locking washer 4	Sicherungsscheibe 4	
342.013	10259651	Shim washer 5/10x0.2	Passscheibe 5/10x0.2	
342.014	UE3140252	Running roller	Laufrolle	
342.015	UE3140251	Supporting roller	St?tzrolle	
342.016	10258828	Cyl.screw M6x16	Zyl.Schraube M6x16	
342.017	10258859	Locking washer 6.4/10	Sicherungsscheibe 6.4/10	
342.018	10383914	Roller rest traversing	Rollenhalter Changierung	
342.025	10259484	Hexagon nut M4-6	6kt-Mutter M4-6	
342.026	10905271	Measuring head Q 10	Messkopf Q 10	
342.027	10258901	Cyl.screw M4x10	Zyl.Schraube M4x10	
342.028	10356008	Oval head screw M6x14	Linsenschraube M6x14	
342.029	10920888	Sensor holder Q10	Sensor Halter Q10	

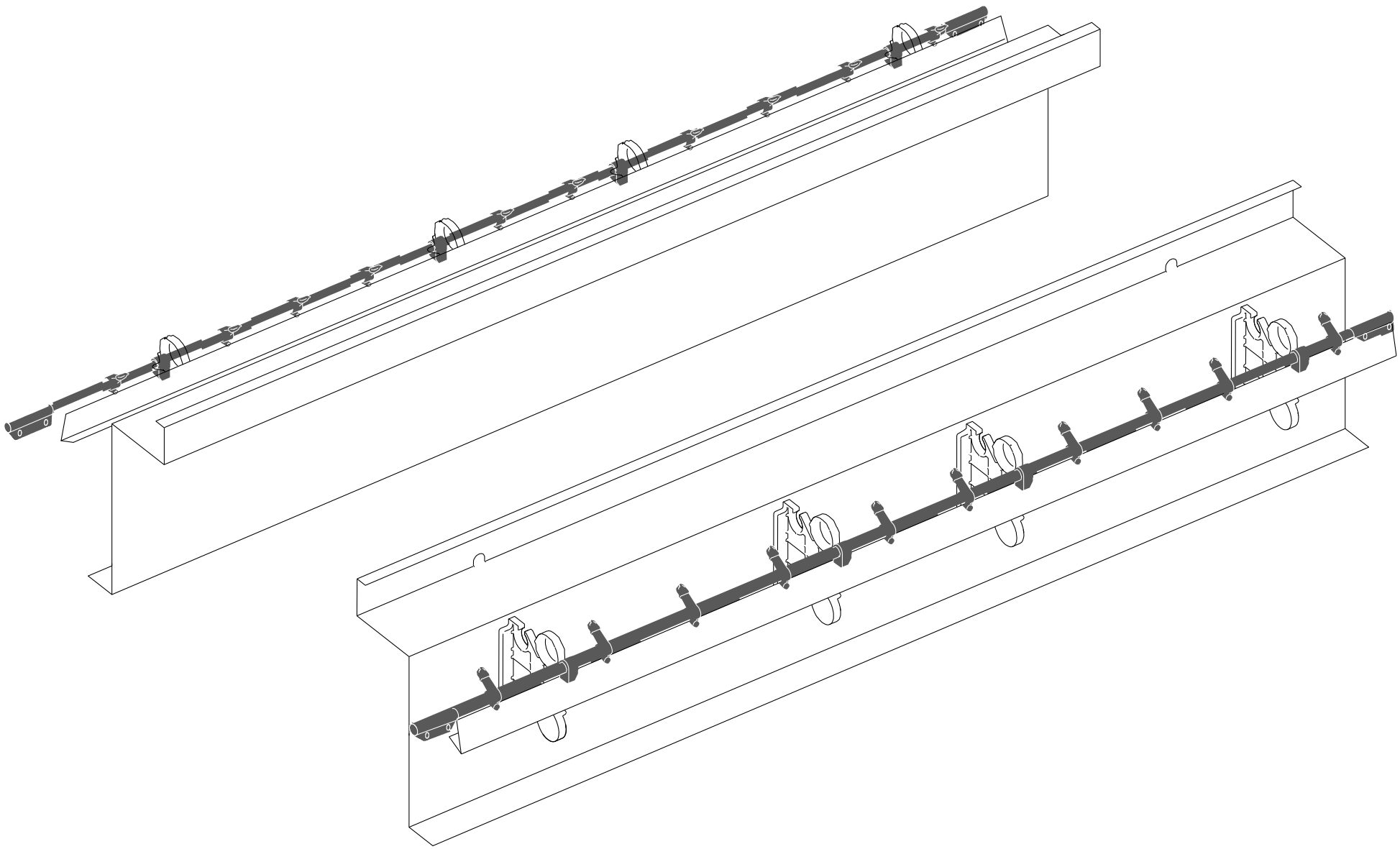

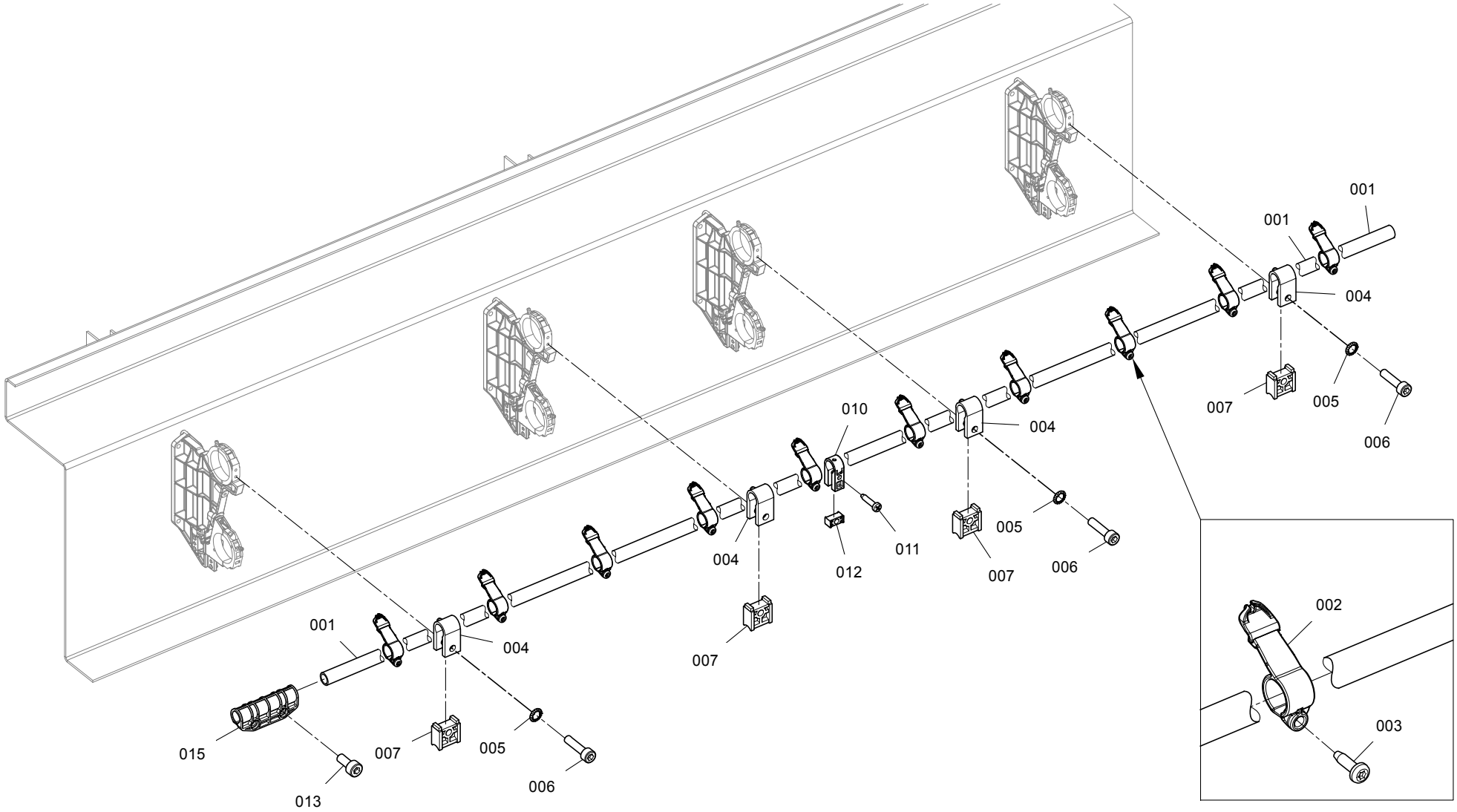

RXX_3_45_101.cgm

Catalogue no. Katalog-Nr.	Part No. Material-Nr.	Part description en	Material-Bezeichnung de	Comment Bemerkung
345.001	10949187	Pipe complete COM	Rohr komplett COM	
345.001	10949190	Pipe complete AL	Rohr komplett AL	
345.002	10961616	Yarn guide holder R36 sym	Fadenf?hrer Halter R36 sym	
345.003	10579601	Screw for plastic KA35x12	PT-Linsenschraube KA35x12	
345.004	10903359	Bearing yarn guide rod SFF	Lager Fadenf?hrerstange SFF	
345.005	10258859	Locking washer 6.4/10	Sicherungsscheibe 6.4/10	
345.006	10258928	Cyl.screw M6x25	Zyl.Schraube M6x25	
345.007	10903375	Slide bushing bottom part	Gleitbuchse Unterteil	
345.010	10903377	Antitorsion device	Verdrehsicherung	
345.011	10903969	Screw for plastic KA35x16	PT-Linsenschraube KA35x16	
345.012	1085613	Spacer block	Distanzst?ck	
345.013	10258912	Cyl.screw M5x12	Zyl.Schraube M5x12	
345.015	10661249	Coupling piece M5	Kupplungsst?ck M5	

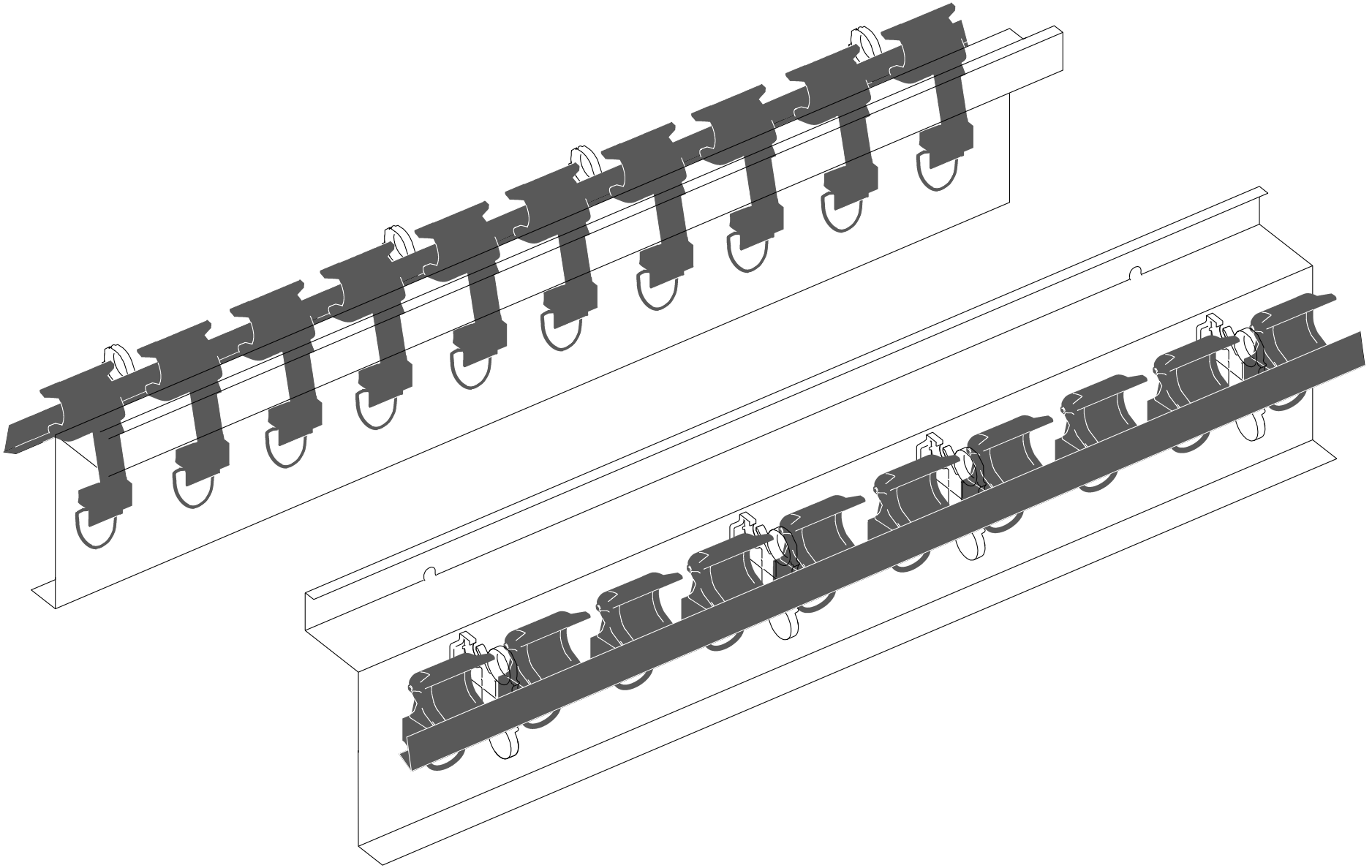

Navi_3_49_01.cgm

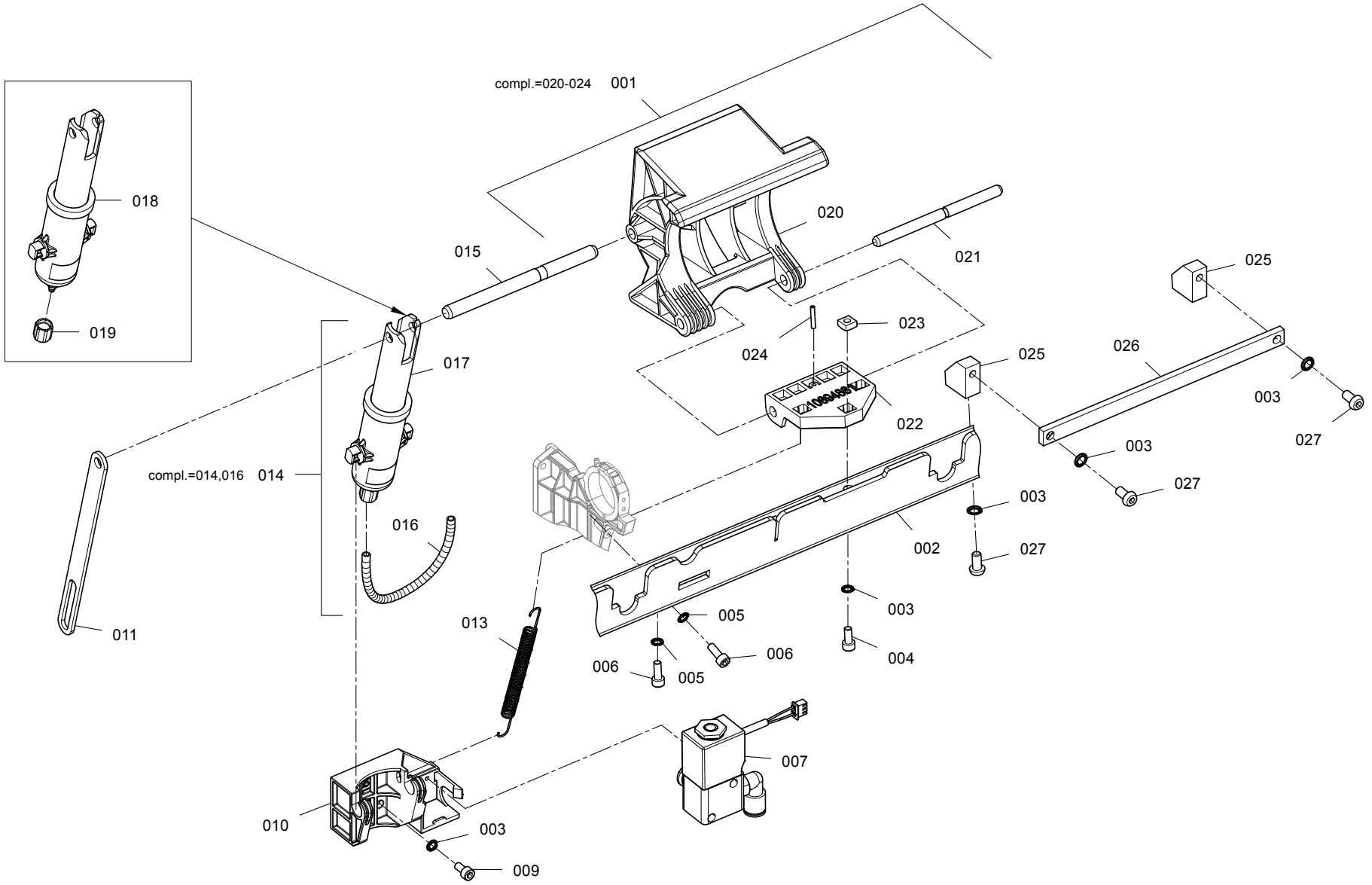

RXX_3_49_101.cgm

Catalogue no. Katalog-Nr.	Part No. Material-Nr.	Part description en	Material-Bezeichnung de	Comment Bemerkung
349.001	10821490	Rocker complete	Wippe komplett	
349.002	10949026	Beam welded Z	Balken geschweisst Z	
349.003	10258859	Locking washer 6.4/10	Sicherungsscheibe 6.4/10	
349.004	10356290	Cyl.screw M6x14	Zyl.Schraube M6x14	
349.005	10259659	Locking washer 6.4/10	Sicherungsscheibe 6.4/10	
349.006	10258828	Cyl.screw M6x16	Zyl.Schraube M6x16	
349.007	11002414	3/2 way solenoid complete DC24V d2,5	3/2-Wege-Magnetventil komplett DC24V d2,	
349.009	10258924	Cyl.screw M6x12	Zyl.Schraube M6x12	
349.010	10661854	Roller adaptor	Walzenaufnahmen	
349.011	10933304	Tension rod SDD	Zugstange SDD	
349.013	10678425	Tension spring 25N	Zugfeder 25N	
349.014	10764461	Pneumatic cylinder complete	Pn.Zylinder komplett	
349.015	10663466	Rocker bolt 2	Wippenbolzen 2	
349.016	10700789	Hydraulic tube 4/6-165	Hydraulikschlauch 4/6-165	
349.017	10840266	Pneumatic cylinder nut	Pn.Zylinder Mutter	
349.018	10629745	Pneumatic cylinder D25 H26 SSH	Pn.Zylinder D25 H26 SSH	
349.019	1084963	Union nut MCK-PK-4-KU	? berwurfmutter MCK-PK-4-KU	
349.020	10814894	Rocker	Wippe	
349.021	10663464	Rocker bolt 1	Wippenbolzen 1	
349.022	10694861	Bracket	Tr?ger	
349.023	10126422	Square nut M6-5	4kt-Mutter M6-5	
349.024	10721657	Dowel pin 3x18	Spannstift 3x18	
349.025	10949030	Guiding rail holder	Laufschiene Halter	
349.026	10949035	Guiding rail short	Laufschiene kurz	
349.027	10258836	Oval head screw M6x12	Linsenschraube M6x12	

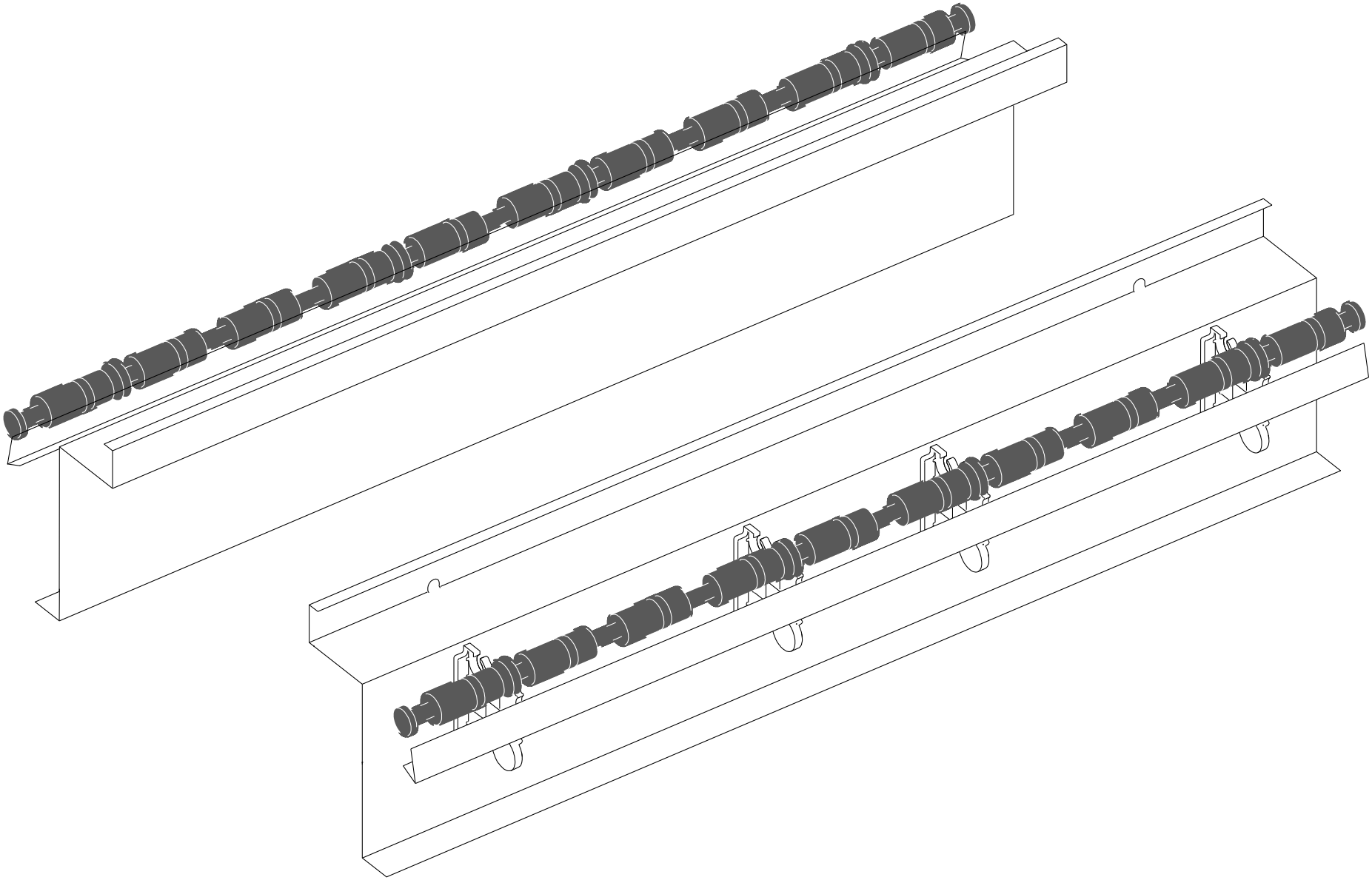

Navi_3_51_01.cgm

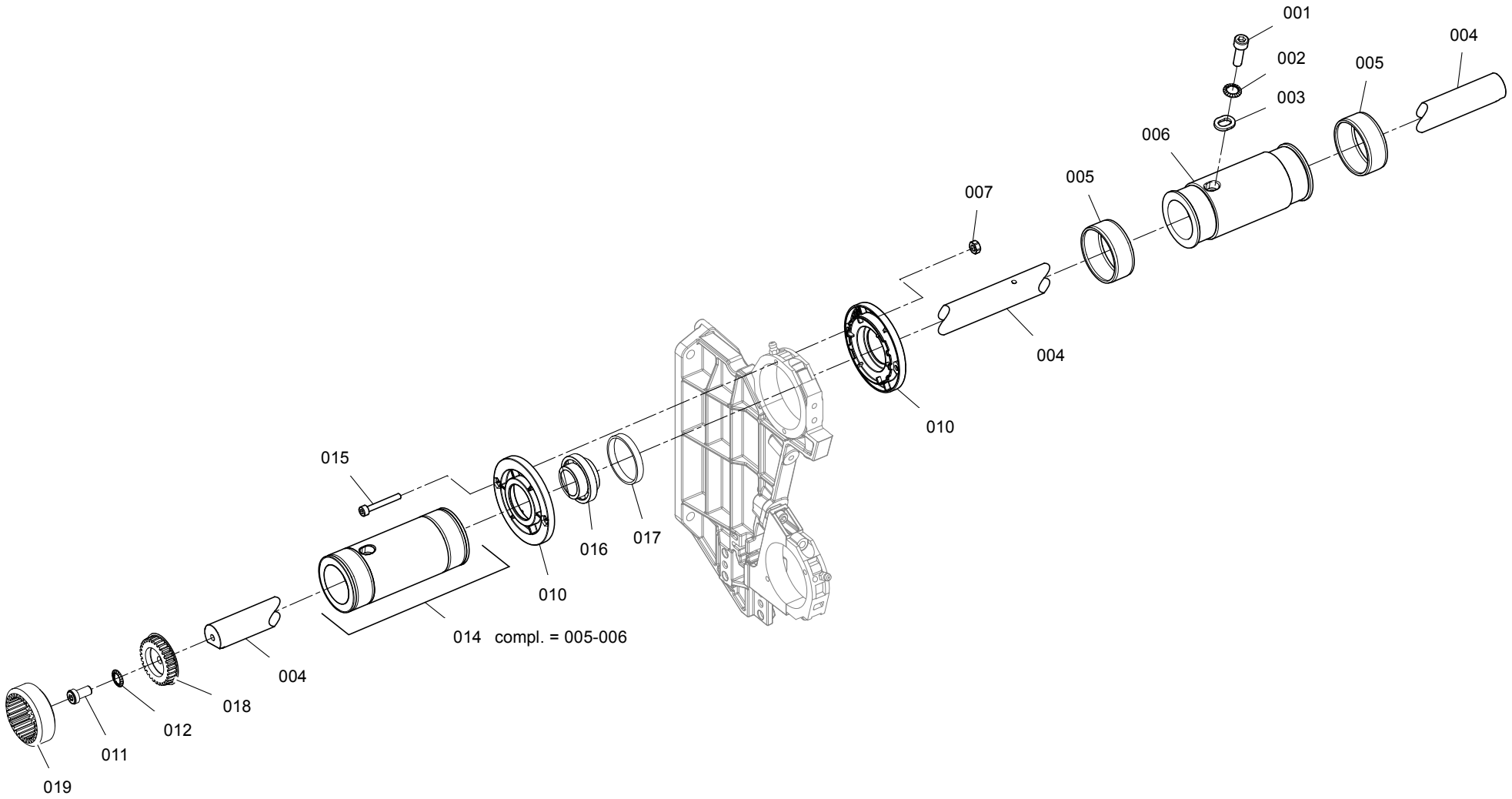

RXX_3_51_A101.cgm

Catalogue no. Katalog-Nr.	Part No. Material-Nr.	Part description en	Material-Bezeichnung de	Comment Bemerkung
351.001	10259461	Cyl.screw M6x20	Zyl.Schraube M6x20	
351.002	10258859	Locking washer 6.4/10	Sicherungsscheibe 6.4/10	
351.003	UE2850315	Washer	Scheibe	
351.004	11002484	Winding shaft CYL + CON 2?	Spulwelle CYL + CON 2?	
351.005	U94250926	Spinning ring 4250926	Spinnring 4250926	
351.006	UA4150405	Lap disc blank	Wickelscheibe unbeschriftet	
351.007	10431758	Hexagon nut M4-8	6kt-Mutter M4-8	
351.010	10802526	Bearing cover	Lagerdeckel	
351.011	10259059	Cyl.screw M8x16	Zyl.Schraube M8x16	
351.012	10461551	Locking washer 8.4/13	Sicherungsscheibe 8.4/13	
351.014	UA4150401	Lap disc complete	Wickelscheibe komplett	
351.015	10258905	Cyl.screw M4x25	Zyl.Schraube M4x25	
351.016	10989727	Deep-groove ball bearing 30/55X28/9 CU	Ri.Kugellager 30/55X28/9 CU	
351.017	1088052	Damping ring winding roller shaft	D?mpfungsring Spulwalzenwelle	
351.018	10815582	Coupling gear subassembly	Kupplungstrieb Baugruppe	
351.019	10734995	Coupling gear ring 28	Kupplungstrieb Ring 28	

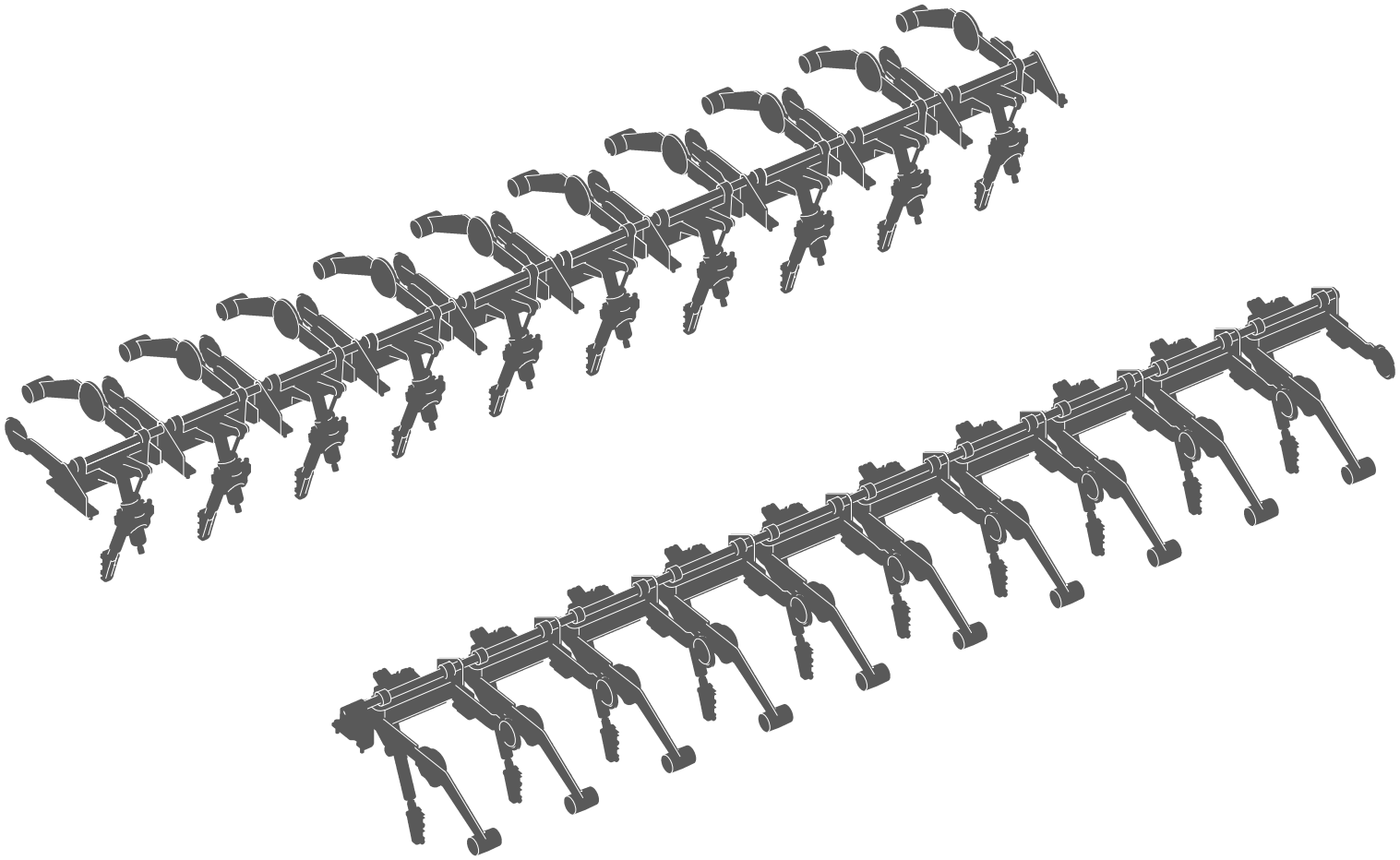

Navi_3_63_01.cgm

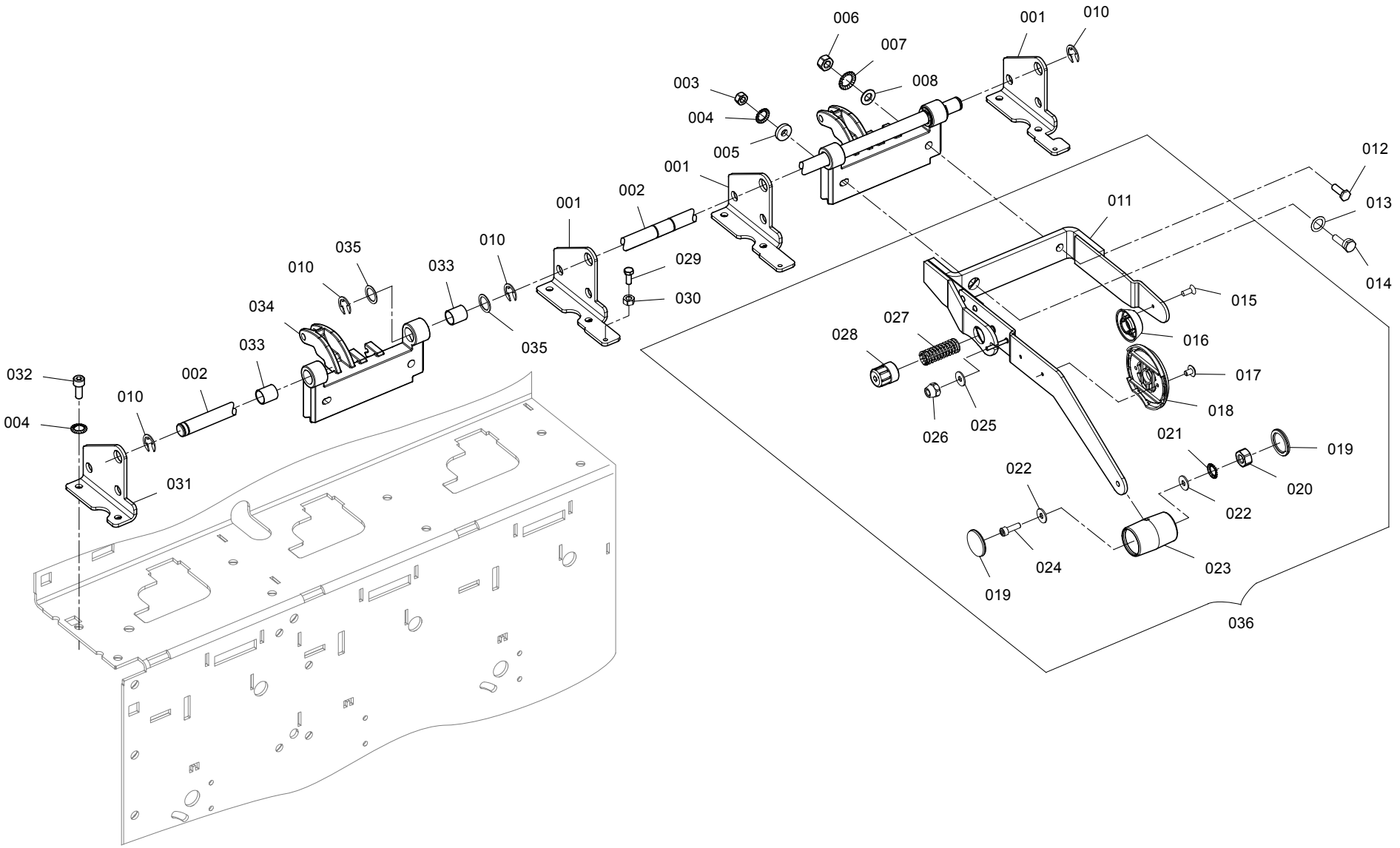

RXX_3_63_101.cgm

Catalogue no. Katalog-Nr.	Part No. Material-Nr.	Part description en	Material-Bezeichnung de	Comment Bemerkung
363.001	10756591	Holder arm II	Halter Arm II	
363.002	10685819	Stick holder	Stab Halter	
363.003	10259607	Hexagon nut M8-8	6kt-Mutter M8-8	
363.004	10461551	Locking washer 8.4/13	Sicherungsscheibe 8.4/13	
363.005	10314565	Washer 8.4	Scheibe 8.4	
363.006	10259610	Hexagon nut M10-6	6kt-Mutter M10-6	
363.007	10259423	Locking washer 10.5/16	Sicherungsscheibe 10.5/16	
363.008	10245270	Washer 10.5-St-140HV	Scheibe 10.5-St-140HV	
363.010	10258871	Locking washer 12	Sicherungsscheibe 12	
363.011	10688621	Shank welded	Schenkel geschweisst	
363.012	10358538	Screw right	Schraube rechts	
363.013	10395827	Washer eccentric screw	Scheibe Exzenterschraube	
363.014	UE3155040	Screw left ECCENTRIC	Schraube links ECCENTRIC	
363.015	U3138030851	Screw 3x8 BN 82427	Schraube 3x8 BN 82427	
363.016	UE3155020	Fixing device package plate	Halterung Spulenteller	
363.017	10438180	Oval head screw flange M4x6	Linsenschraube Flansch M4x6	
363.018	UE3155010	Fixing device package plate	Halterung Spulenteller	
363.019	UE3155070	Lid	Deckel	
363.020	10431759	Hexagon nut M6-8	6kt-Mutter M6-8	
363.021	10258859	Locking washer 6.4/10	Sicherungsscheibe 6.4/10	
363.022	10258855	Washer 6.4-St-100HV	Scheibe 6.4-St-100HV	
363.023	UE3155060	Handle arm	Griff Arm	
363.024	10259461	Cyl.screw M6x20	Zyl.Schraube M6x20	
363.025	10354211	Washer 4.3-St-100HV	Scheibe 4.3-St-100HV	
363.026	10584185	Hexagon nut M4-8	6kt-Mutter M4-8	
363.027	UE3155050	Spring arm	Feder Arm	
363.028	UE3155031	Lid	Deckel	
363.029	10243705	Hex. screw M6x18	6kt-Schraube M6x18	
363.030	10259495	Hexagon nut M6-6	6kt-Mutter M6-6	
363.031	10741804	Arm holder support	Armhalter Support	

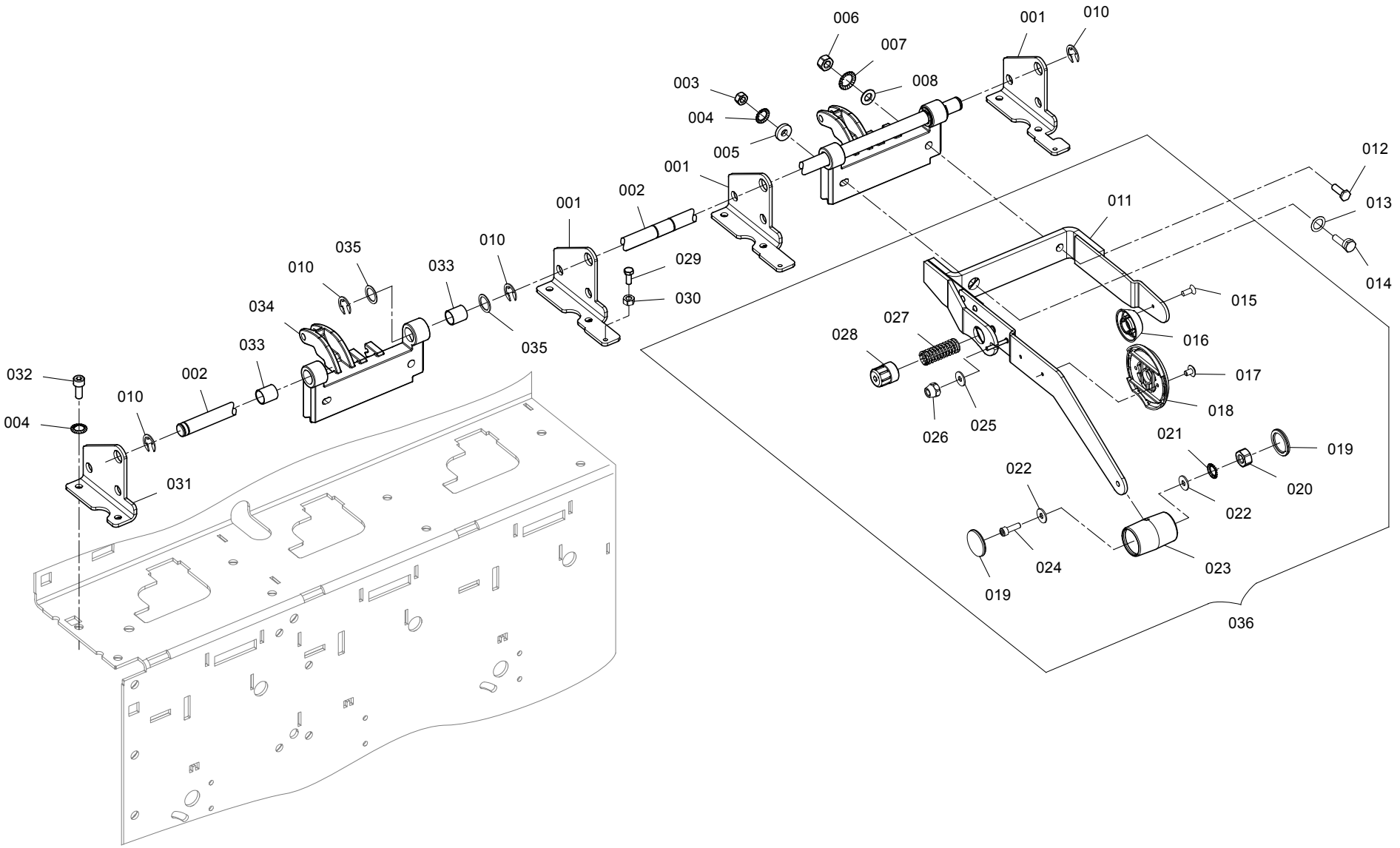

RXX_3_63_101.cgm

Catalogue no. Katalog-Nr.	Part No. Material-Nr.	Part description en	Material-Bezeichnung de	Comment Bemerkung
363.032	10258948	Cyl.screw M8x20	Zyl.Schraube M8x20	
363.033	10522438	Bushing 16B18x20-P1	Buchse 16B18x20-P1	
363.034	10970140	Arm holder Cyl, c2	Armhalter Cyl, c2	
363.035	10494325	Shim washer 16/22x0.5	Passscheibe 16/22x0.5	
363.036	10688623	Shank CYL.+CONE2	Schenkel CYL.+CONE2	

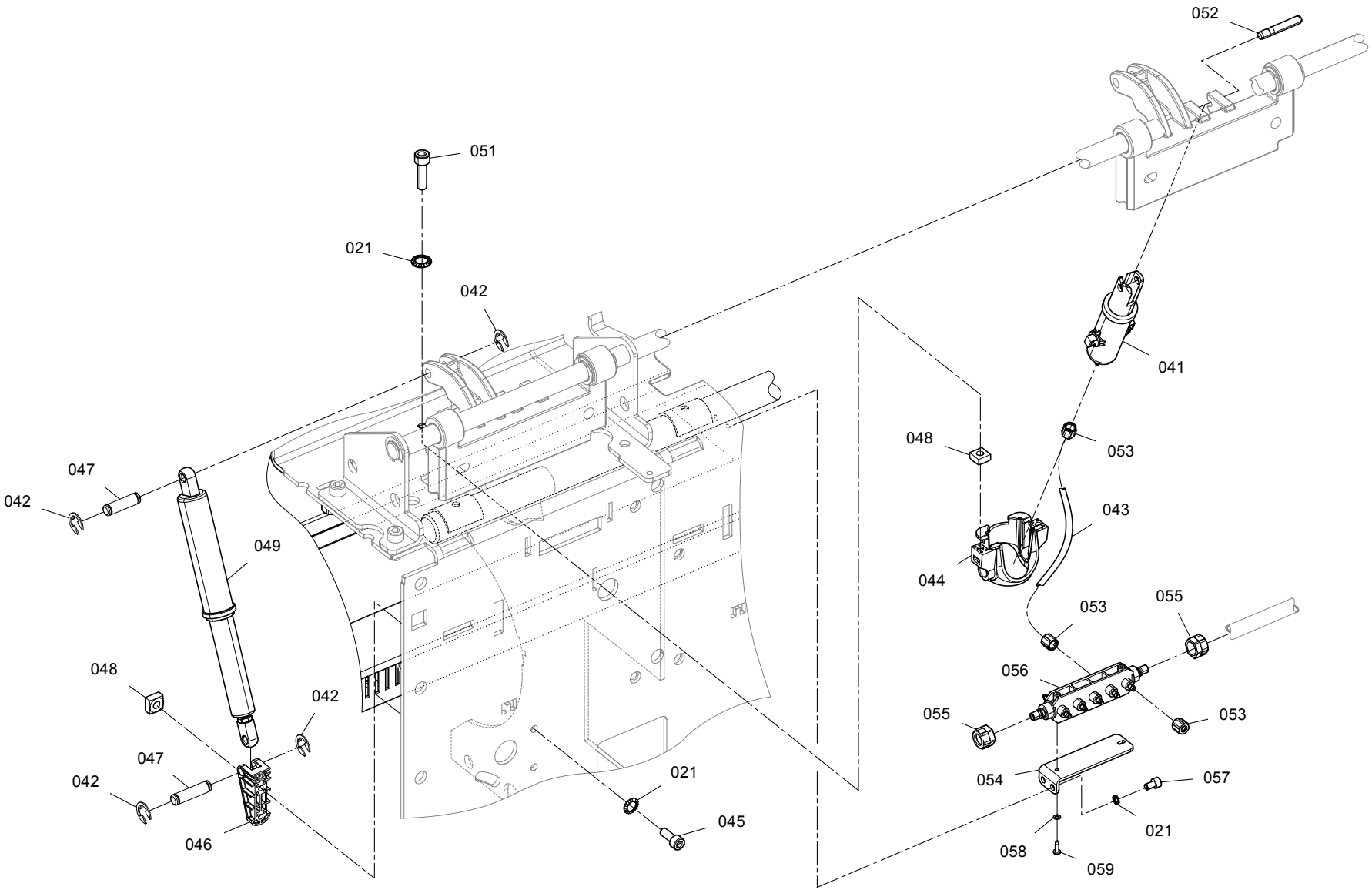

RXX_3_63_201.cgm

Catalogue no. Katalog-Nr.	Part No. Material-Nr.	Part description en	Material-Bezeichnung de	Comment Bemerkung
363.021	10258859	Locking washer 6.4/10	Sicherungsscheibe 6.4/10	
363.041	10629745	Pneumatic cylinder D25 H26 SSH	Pn.Zylinder D25 H26 SSH	
363.042	10356259	Locking washer 6	Sicherungsscheibe 6	
363.043	10980476	Hose blue 1208	Schlauch blau 1208	
363.043	10980573	Hose blue 6/4	Schlauch blau 6/4	
363.043	10981849	Hose blue 6/4-1000	Schlauch blau 6/4-1000	
363.043	10981886	Hose blue 6/4-800	Schlauch blau 6/4-800	
363.043	10981899	Hose blue 12/8-730	Schlauch blau 12/8-730	
363.044	10929741	Pressure cylinder holder	Druckzylinder Halter	
363.045	10258828	Cyl.screw M6x16	Zyl.Schraube M6x16	
363.046	10440445	Suspension	Aufh?ngung	
363.047	UE3140819	Tappet	Zapfen	
363.048	10126422	Square nut M6-5	4kt-Mutter M6-5	
363.049	10929989	Vibration damper	Schwingungsd?mpfer	
363.051	10258927	Cyl.screw M6x22	Zyl.Schraube M6x22	
363.052	10929948	Cylinder stud package holder	Zylinderzapfen Spulenhalter	
363.053	1084963	Union nut MCK-PK-4-KU	? berwurfmutter MCK-PK-4-KU	
363.054	10978419	Distributor block holder R35-V2	Verteilblock Halter R35-V2	
363.055	10320800	Union nut black 12x9	? berwurfmutter schwarz 12x9	
363.056	10971341	Compressed air hose connection piece	Druckluftschlauch Stutzen	
363.057	10258830	Cyl.screw M6x10	Zyl.Schraube M6x10	
363.058	10002945	Washer 3.7	Scheibe 3.7	
363.059	10579601	Screw for plastic KA35x12	PT-Linsenschraube KA35x12	

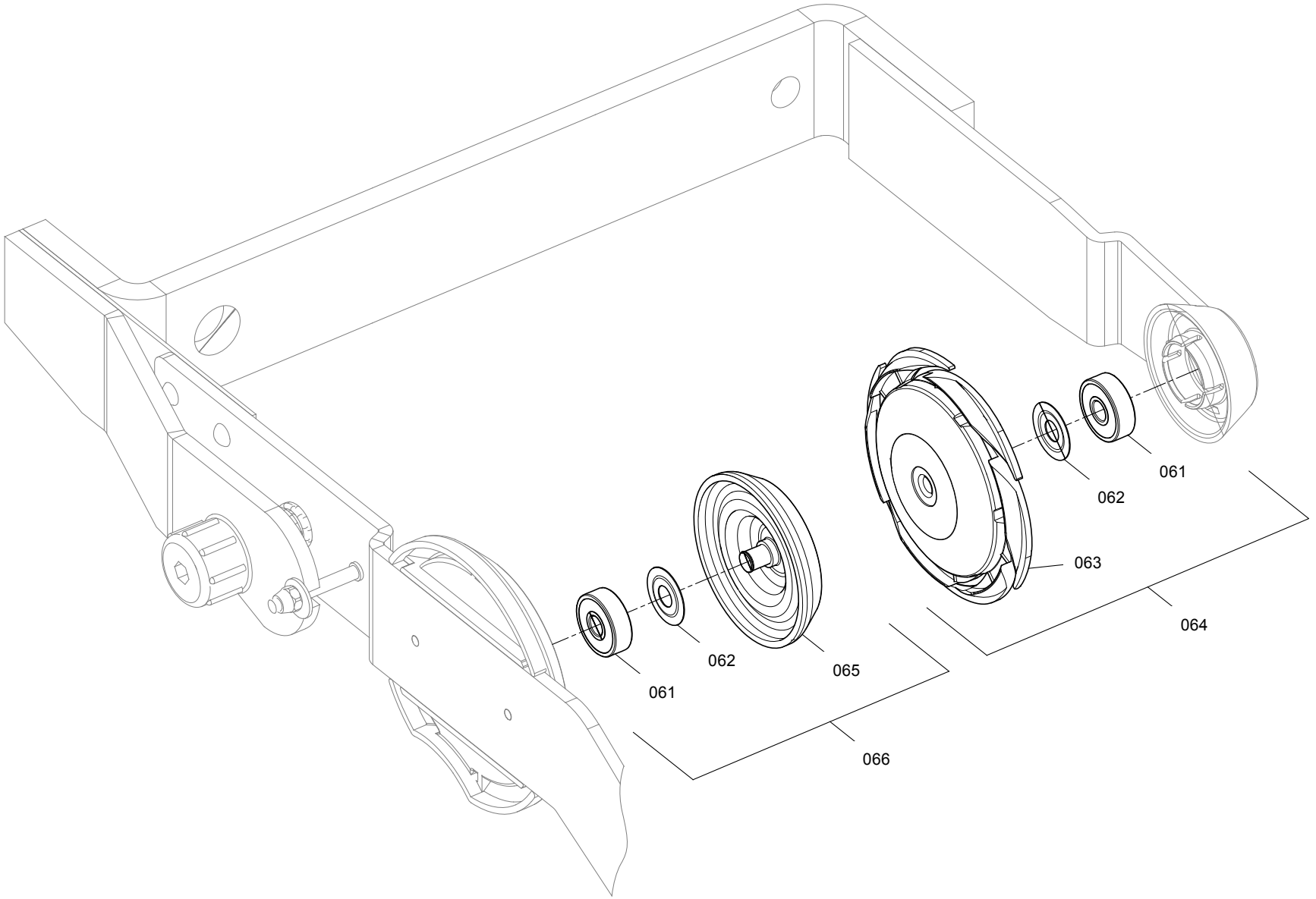

RXX_3_63_301.cgm

58361

Catalogue no. Katalog-Nr.	Part No. Material-Nr.	Part description en	Material-Bezeichnung de	Comment Bemerkung
363.061	U34110626	Bearing 626 2Z	Lager 626 2Z	
363.062	UE7155818	Dust shield	Staubschutzhaube	
363.063	10776452	Package plate right D54	Spulenteller rechts D54	
363.064	10776453	Package plate right D54 COMPL.	Spulenteller rechts D54 COMPL.	
363.065	10814547	Package plate left D42 N	Spulenteller links D42 N	
363.066	10814592	Package plate left D42 N COMPL.	Spulenteller links D42 N COMPL.	

R 36

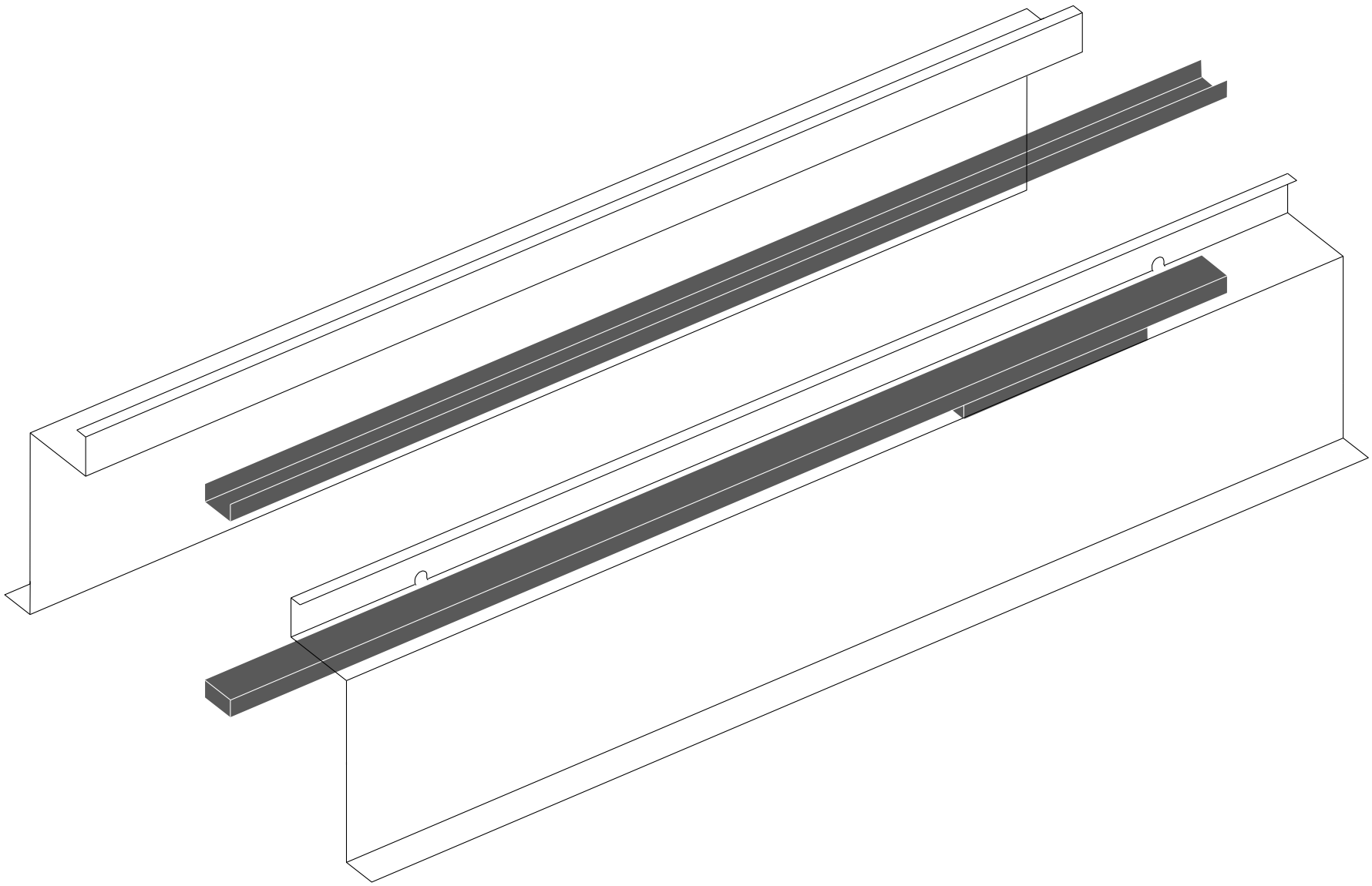

375

Navi_3_75_01.cgm

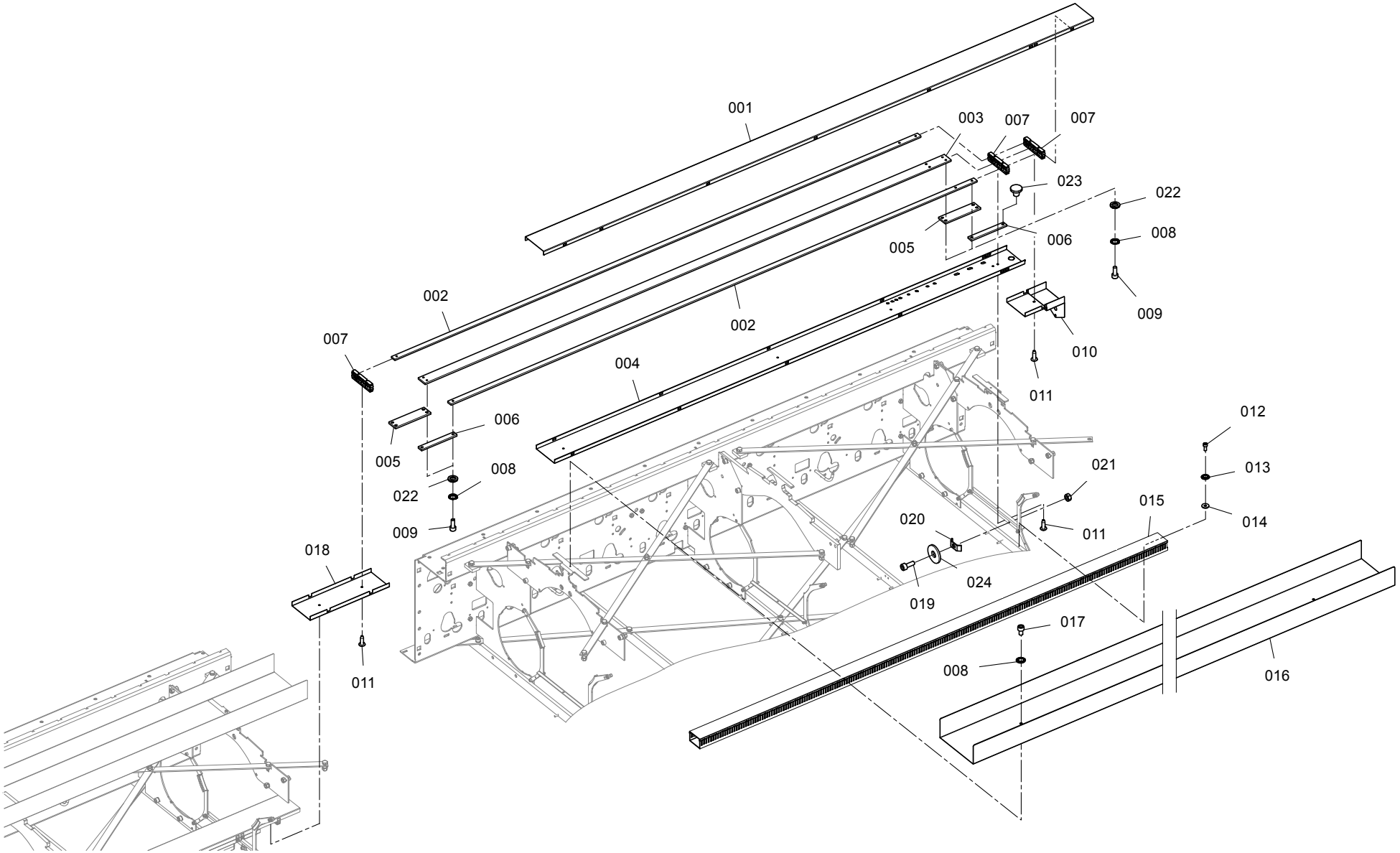

RXX_3_75_102.cgm

Catalogue no. Katalog-Nr.	Part No. Material-Nr.	Part description en	Material-Bezeichnung de	Comment Bemerkung
375.001	10978396	Channel 24V	Kanal 24V	
375.002	10978386	Strip electrical 20x6	Leiste elektro 20x6	
375.003	10978385	Strip electrical 40x6	Leiste elektro 40x6	
375.004	10978414	Channel cover complete 24V R35-V2	Kanaldeckel komplett 24V R35-V2	
375.005	10939590	Strip electrical 40x6	Leiste elektro 40x6	
375.006	10703334	Strip electrical 20x6	Leiste elektro 20x6	
375.007	10976971	Fixing device strip 24V R35-V2	Halterung Leiste 24V R35-V2	
375.008	10259659	Locking washer 6.4/10	Sicherungsscheibe 6.4/10	
375.009	10258828	Cyl.screw M6x16	Zyl.Schraube M6x16	
375.010	11038601	Channel cover 24V HES R36	Kanal Abdeckung 24V HES R36	
375.011	10977500	Screw for plastic KA50x16-H	PT-Linsenschraube KA50x16-H	
375.012	10258901	Cyl.screw M4x10	Zyl.Schraube M4x10	
375.013	10483109	Locking washer 4.3/7	Sicherungsscheibe 4.3/7	
375.014	10007812	Washer 4.3	Scheibe 4.3	
375.015	10978526	Cable duct electrical	Kabelkanal elektro	
375.016	10905479	Channel electrical	Kanal elektro	
375.017	10258830	Cyl.screw M6x10	Zyl.Schraube M6x10	
375.018	11038548	Channel cover 24V	Kanal Abdeckung 24V	
375.019	10259461	Cyl.screw M6x20	Zyl.Schraube M6x20	
375.020	10813631	Holder cable CAN	Halter Kabel CAN	
375.021	10431759	Hexagon nut M6-8	6kt-Mutter M6-8	
375.022	10259678	Washer 6.4-St-200HV	Scheibe 6.4-St-200HV	
375.023	11045439	Locking plug	Verschlussstopfen	
375.024	10258855	Washer 6.4-St-100HV	Scheibe 6.4-St-100HV	

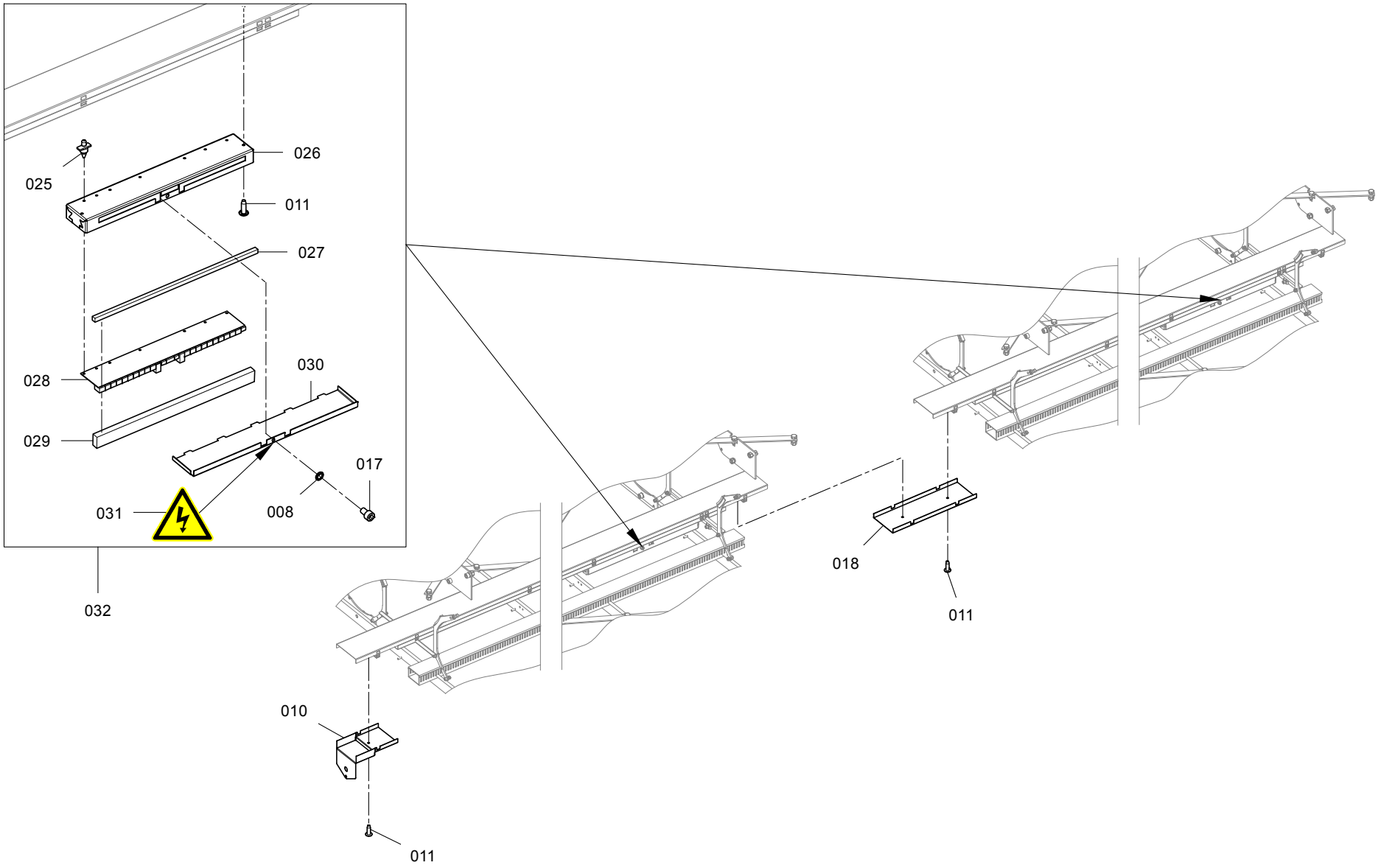
025
026
011
027
028
030
029
017
031
008
032
018
011
010
011

Catalogue no. Katalog-Nr.	Part No. Material-Nr.	Part description en	Material-Bezeichnung de	Comment Bemerkung
375.008	10259659	Locking washer 6.4/10	Sicherungsscheibe 6.4/10	
375.010	11038601	Channel cover 24V HES R36	Kanal Abdeckung 24V HES R36	
375.011	10977500	Screw for plastic KA50x16-H	PT-Linsenschraube KA50x16-H	
375.017	10258830	Cyl.screw M6x10	Zyl.Schraube M6x10	
375.018	10979702	Channel connecting cover 24V R35-V2	Kanal Anschlussdeckel 24V R35-V2	
375.025	U48816465	Stud bolt SKIFFY 100 0352 000 02	Stehbolzen SKIFFY 100 0352 000 02	
375.026	10976434	Basic box bottom part SIR 14	Grundkasten Unterteil SIR 14	
375.027	10684772	Seal 2	Dichtung 2	
375.028	10939421	Printed circuit board SIR14	Leiterplatte SIR14	
375.029	10943274	Seal 3 SIR14	Dichtung 3 SIR14	
375.030	11036255	Cover lid	Abdeckung Deckel	
375.031	10356570	Warning sign W012-50	Warnschild W012-50	
375.032	10976431	Electric panel section SIR 14	Elektroschrank Sektion SIR 14	

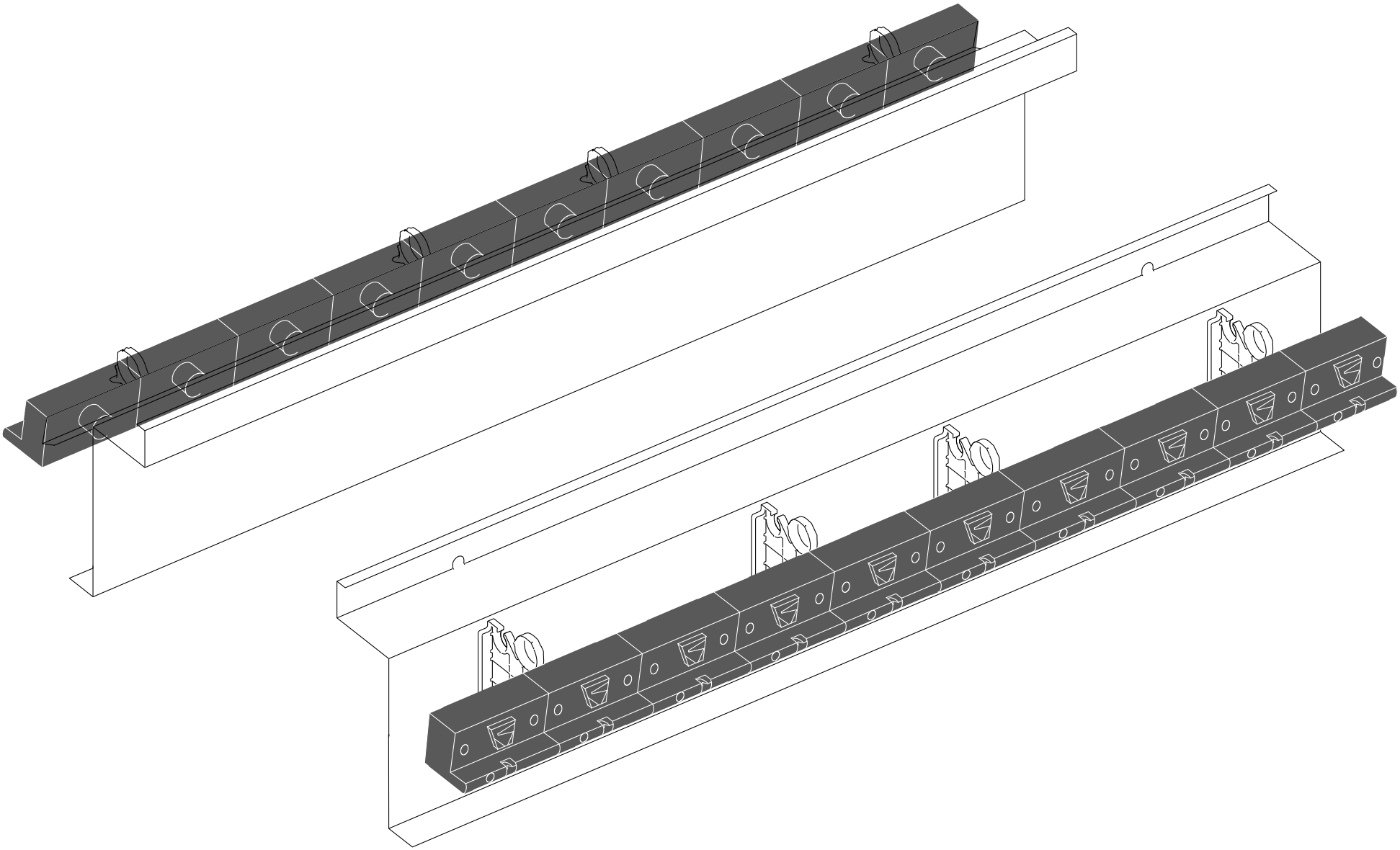

Navi_3_78_B01.cgm

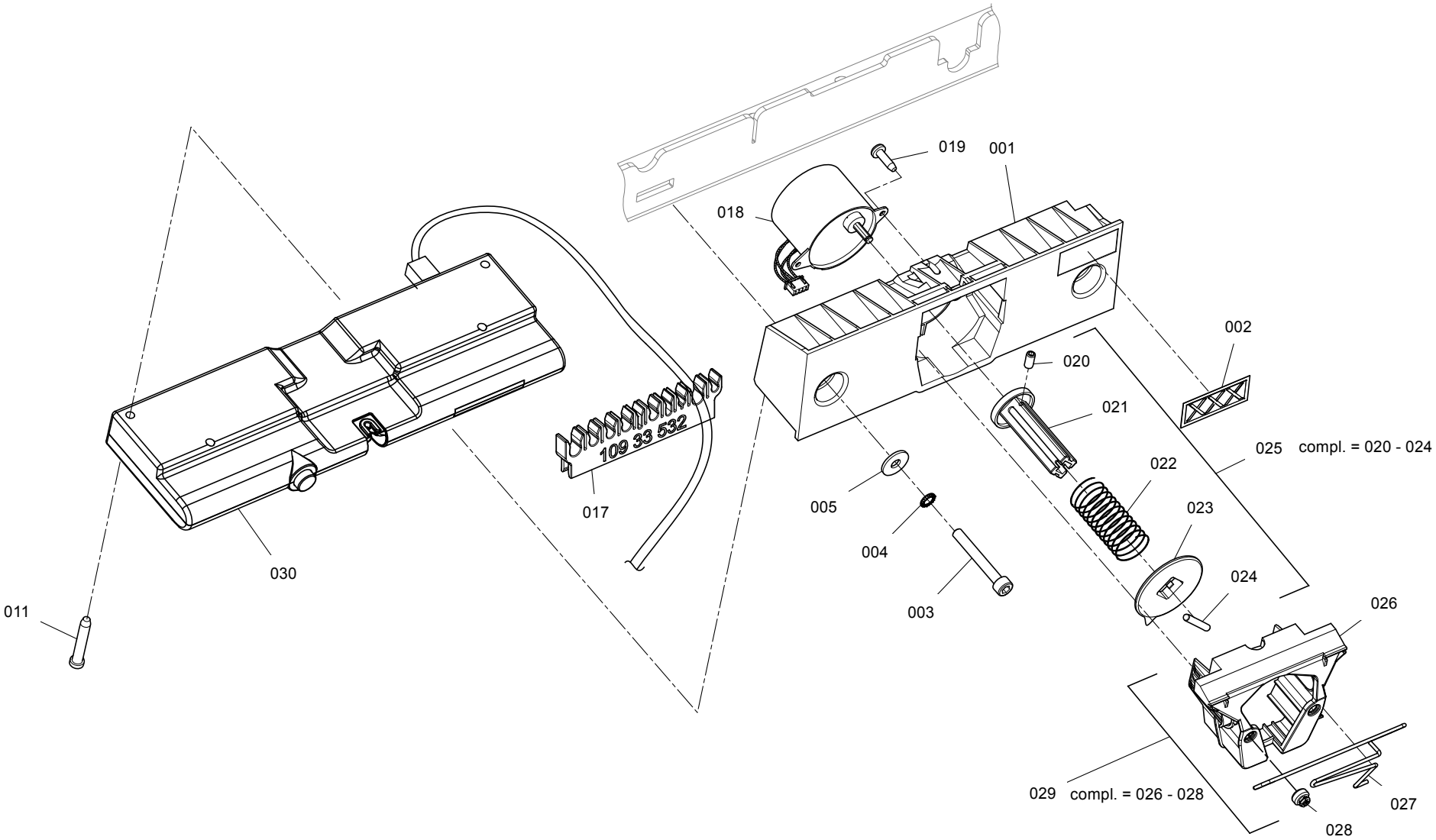

RXX_3_78_B101.cgm

Catalogue no. Katalog-Nr.	Part No. Material-Nr.	Part description en	Material-Bezeichnung de	Comment Bemerkung
378.001	10714661	Bracket plate WAX	Tr?gerplatte WAX	
378.002	10680177	Sign	Schild	
378.003	10258933	Cyl.screw M6x45	Zyl.Schraube M6x45	
378.004	10259659	Locking washer 6.4/10	Sicherungsscheibe 6.4/10	
378.005	10258855	Washer 6.4-St-100HV	Scheibe 6.4-St-100HV	
378.011	10720589	Screw for plastic KA40x30-H	PT-Linsenschraube KA40x30-H	
378.017	10933532	Strap R36	Bride R36	
378.018	10698048	Motor waxing device	Motor Paraffinierung	
378.019	10579601	Screw for plastic KA35x12	PT-Linsenschraube KA35x12	
378.020	10578363	Threaded pin M2.5x6-45H	Gewindestift M2.5x6-45H	
378.021	UE3101115	Carrier waxing device	Mitnehmer Paraffinierung	
378.022	UE7201133	Spring waxing device	Feder Paraffinierung	
378.023	UE7201134	Round plate waxing device	Ronde Paraffinierung	
378.024	UE7201137	Lock pin	Verriegelungsstift	
378.025	UE3101111	Fixed link waxing device COMPLETE	Steg Paraffinierung COMPLETE	
378.026	10715684	Waxing device covering	Paraffinierung Verkleidung	
378.027	10716936	Guiding wire waxing device	F?hrungsdraht Paraffinierung	
378.028	UA3998827	Supporting roller waxing device	St?tzrolle Paraffinierung	
378.029	10715683	Covering waxing device	Verkleidung Paraffinierung	
378.030	10951079	Control block complete SUD14W	Steuerblock komplett SUD14W	

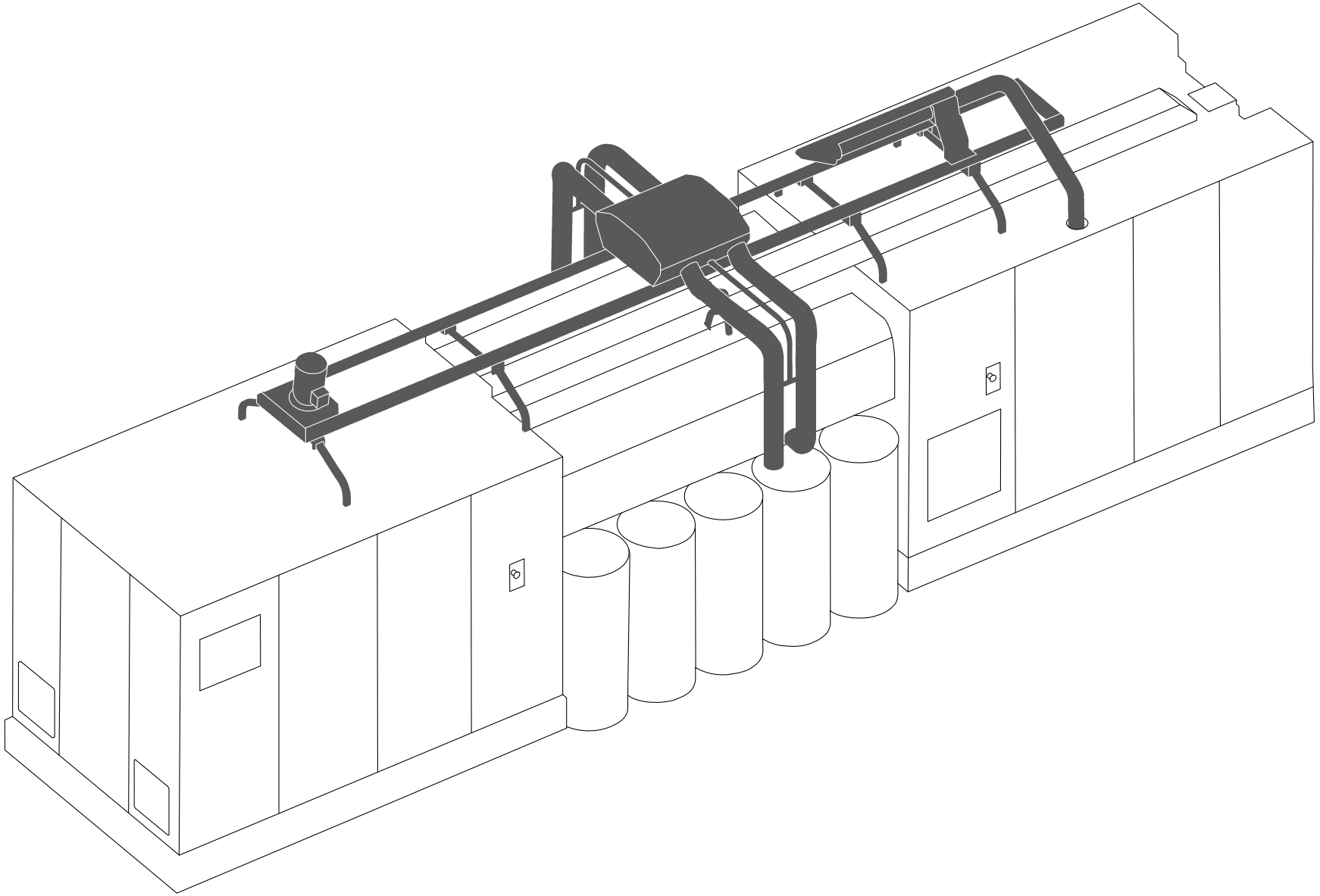

Navi_6_01.cgm

R 36

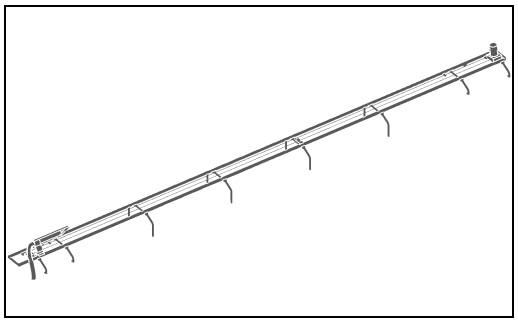

610

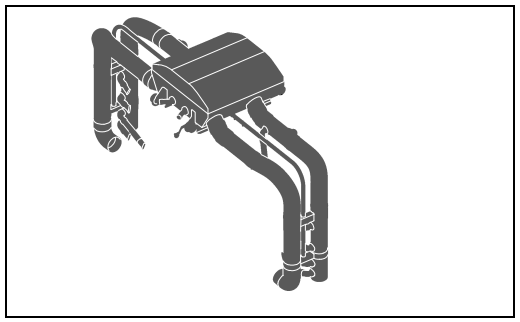

620

R 36

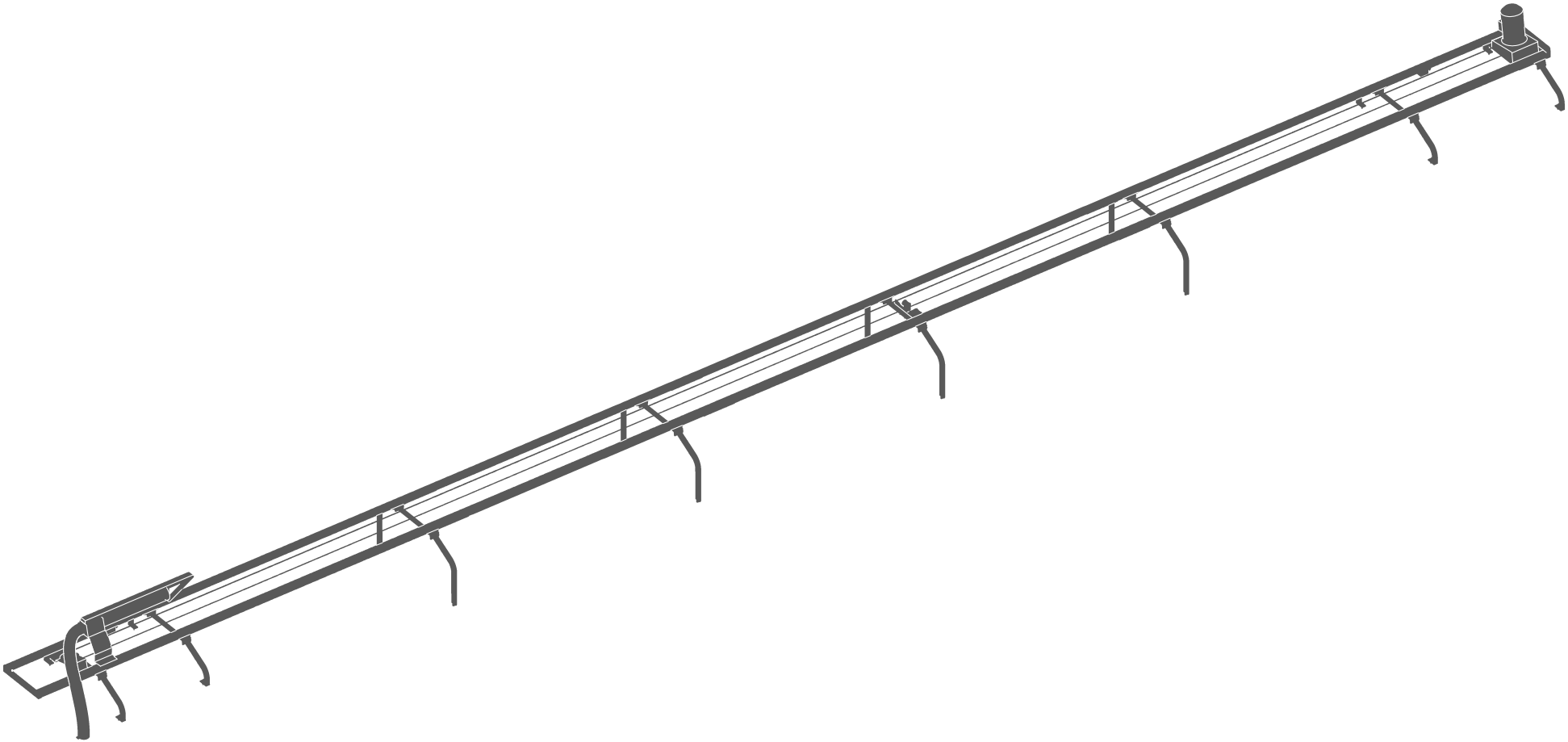

610

Navi_6_10_01.cgm

R 36

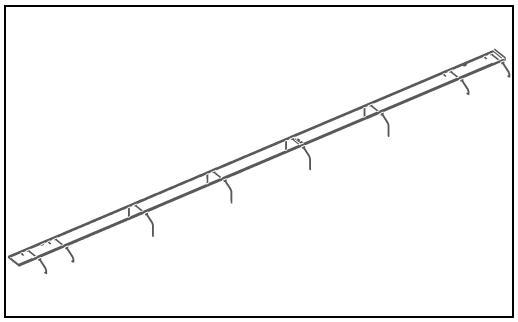

61010

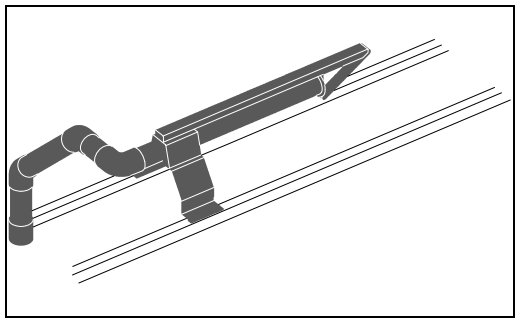

61020

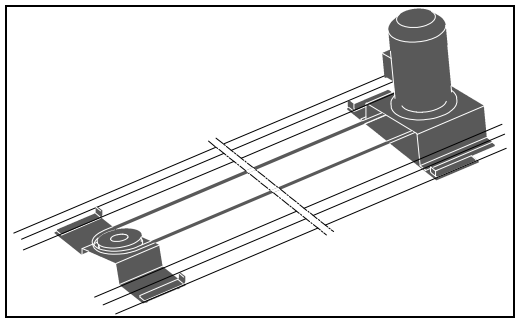

61030

R 36

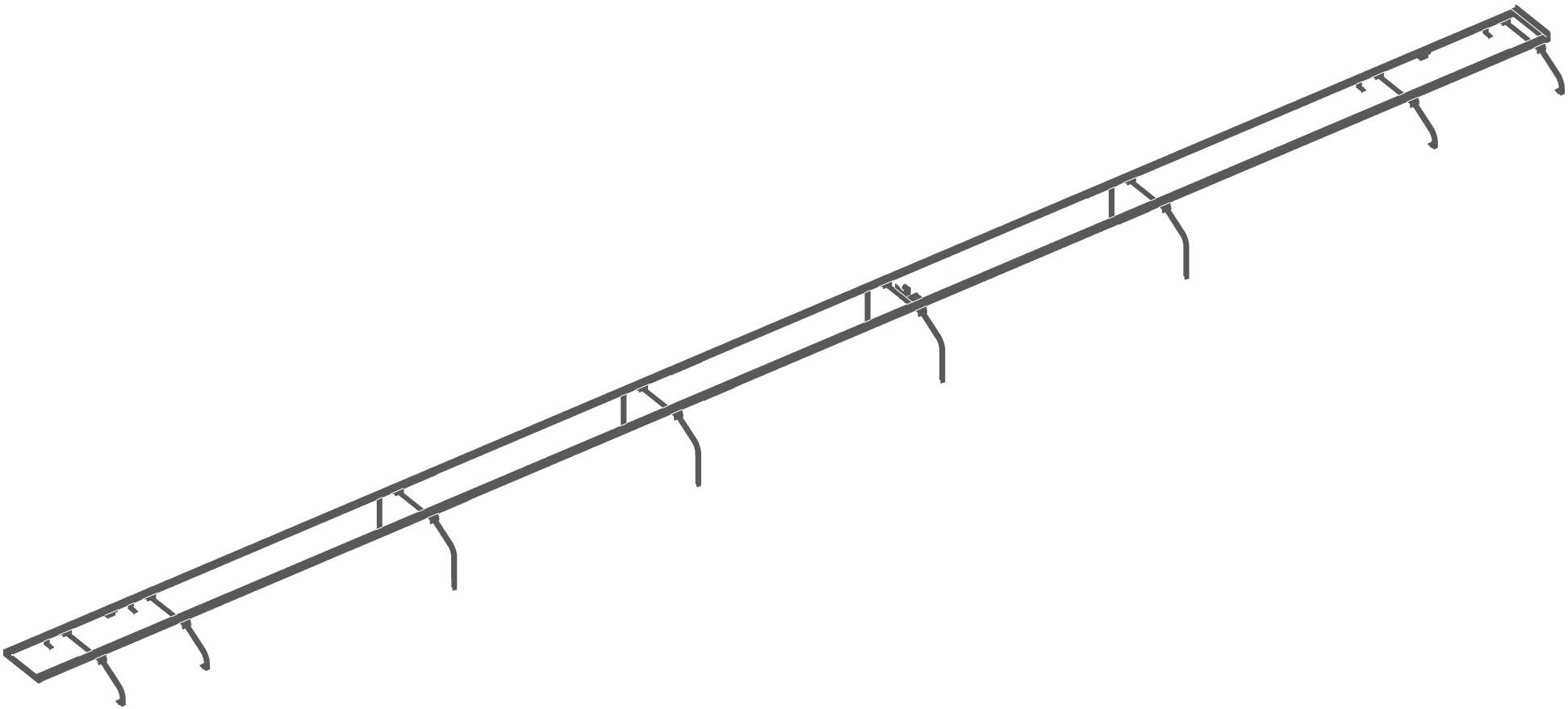

61010

Navi_6_10_10_01.cgm

R 36

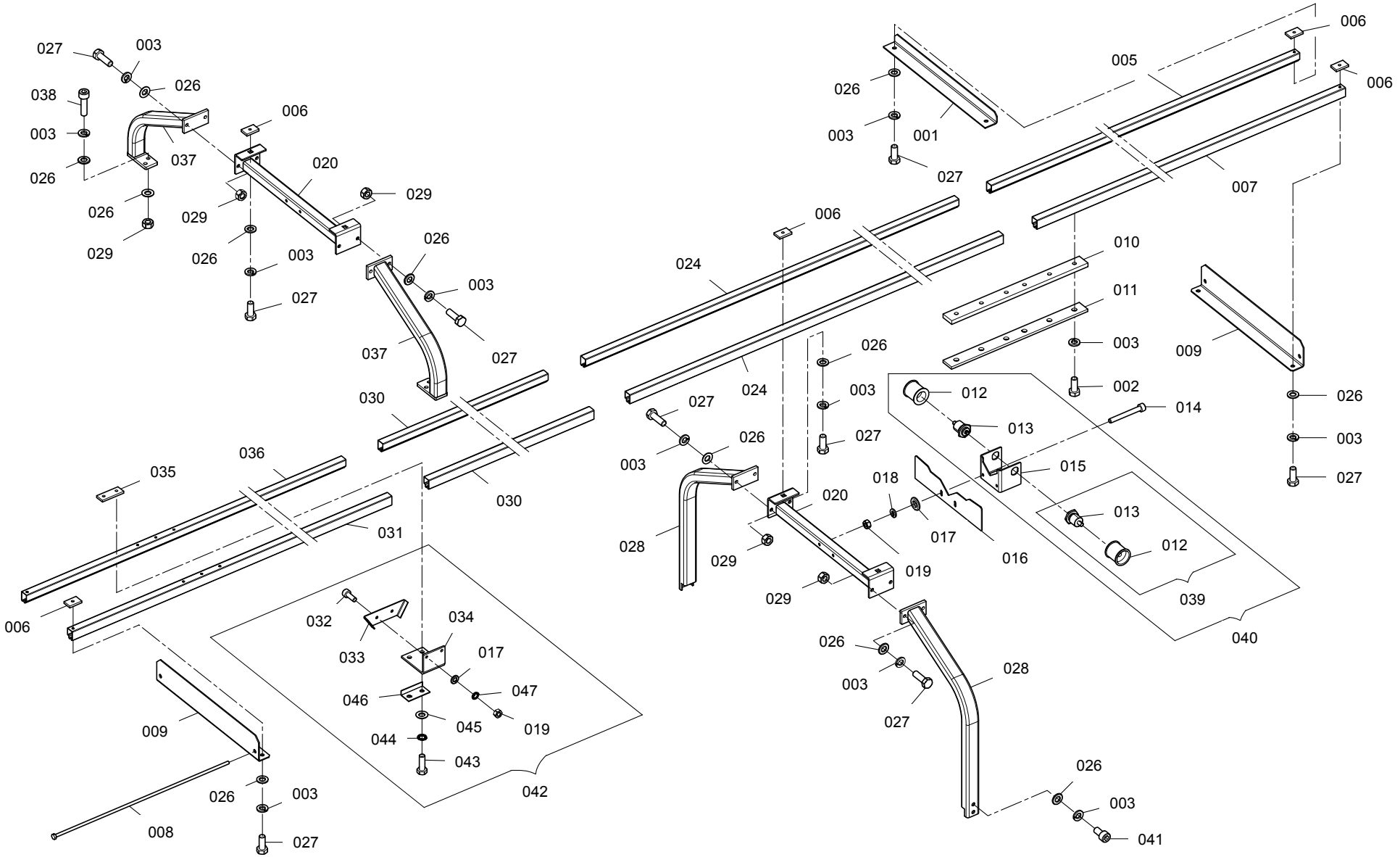

61010

RXX_6_10_10_102.cgm

Catalogue no. Katalog-Nr.	Part No. Material-Nr.	Part description en	Material-Bezeichnung de	Comment Bemerkung
61010.001	10637694	Angle plate	Winkel Platte	
61010.002	10259085	Hex. screw M8x20	6kt-Schraube M8x20	
61010.003	10338177	Spring ring 8	Federring 8	
61010.005	10630251	Profile rail head R	Profilschiene Kopf R	
61010.006	10625466	Connection piece	Stutzen	
61010.007	10630216	Profile rail head L	Profilschiene Kopf L	
61010.008	10617798	Threaded pin	Gewindestift	
61010.009	10630390	Angle	Winkel	
61010.010	10644589	Connection piece B	Stutzen B	
61010.011	10644594	Connection piece A	Stutzen A	
61010.012	10612520	Cylindrical roll	Zylinderrolle	
61010.013	U90310144	Bearing 73-1-49	Lager 73-1-49	
61010.014	10258935	Cyl.screw M6x50	Zyl.Schraube M6x50	
61010.015	10612551	Sheet roll	Blech Rolle	
61010.016	10713616	Feed bow	Einzugsb?gel	
61010.017	10354210	Washer 6.4-St-140HV	Scheibe 6.4-St-140HV	
61010.018	10338176	Spring ring 6	Federring 6	
61010.019	10431759	Hexagon nut M6-8	6kt-Mutter M6-8	
61010.020	10644334	Profile holder	Profilhalter	
61010.024	10620574	Rail 4M	Schiene 4M	
61010.026	10259629	Washer 8.4-St-140HV	Scheibe 8.4-St-140HV	
61010.027	10259086	Hex. screw M8x25	6kt-Schraube M8x25	
61010.028	10925338	Supporting brace S R36	St?tzstrebe S R36	
61010.029	10259607	Hexagon nut M8-8	6kt-Mutter M8-8	
61010.030	10653206	Rail variant 18S	Schiene Variante 18S	
61010.030	10653207	Rail variant 17S	Schiene Variante 17S	
61010.030	10653242	Rail variant 20S	Schiene Variante 20S	
61010.030	10653243	Rail variant 19S	Schiene Variante 19S	
61010.030	10653254	Rail variant 16S	Schiene Variante 16S	
61010.030	10653400	Rail variant 15S	Schiene Variante 15S	

R 36

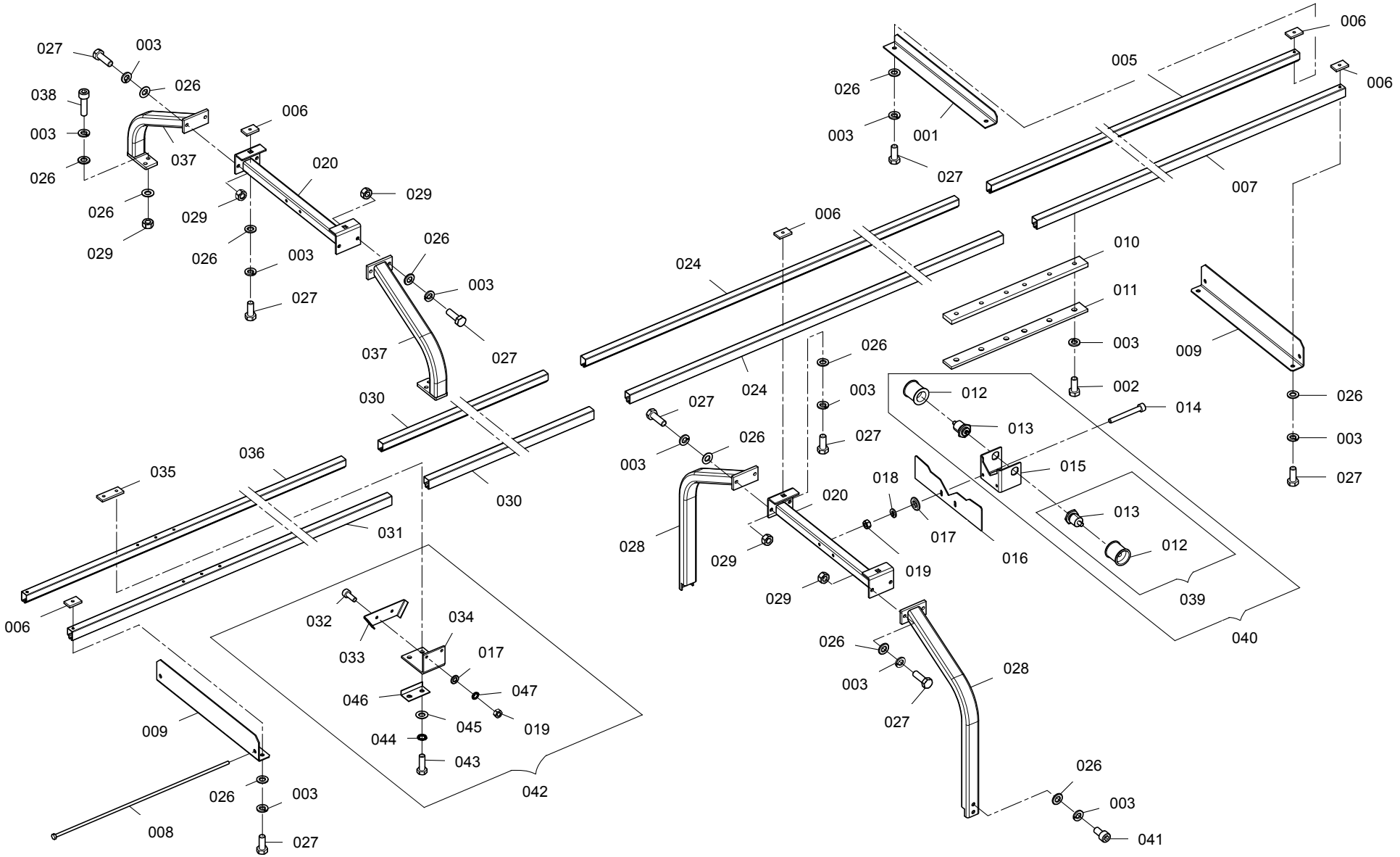

61010

RXX_6_10_10_102.cgm

Catalogue no. Katalog-Nr.	Part No. Material-Nr.	Part description en	Material-Bezeichnung de	Comment Bemerkung
61010.030	10653433	Rail variant 12S	Schiene Variante 12S	
61010.030	10653434	Rail variant 11S	Schiene Variante 11S	
61010.030	10653435	Rail variant 10S	Schiene Variante 10S	
61010.030	10653442	Rail variant 14S	Schiene Variante 14S	
61010.030	10653443	Rail variant 13S	Schiene Variante 13S	
61010.030	10740956	Rail variant 22S	Schiene Variante 22S	
61010.030	10742225	Rail variant 23S	Schiene Variante 23S	
61010.030	10757930	Rail variant 5S	Schiene Variante 5S	
61010.030	10764547	Rail variant 21S	Schiene Variante 21S	
61010.030	10765623	Rail variant 8S	Schiene Variante 8S	
61010.030	10765686	Rail variant 7S	Schiene Variante 7S	
61010.030	10765690	Rail variant 6S	Schiene Variante 6S	
61010.030	10765723	Rail variant 4S	Schiene Variante 4S	
61010.030	10765726	Rail variant 3S	Schiene Variante 3S	
61010.030	10919734	Rail variant 24S	Schiene Variante 24S	
61010.030	10919737	Rail variant 25S	Schiene Variante 25S	
61010.030	10938837	Rail variant 28S	Schiene Variante 28S	
61010.030	10938839	Rail variant 30S	Schiene Variante 30S	
61010.030	10938855	Rail variant 27S	Schiene Variante 27S	
61010.030	10938858	Rail variant 29S	Schiene Variante 29S	
61010.031	10630369	Profile rail end L	Profilschiene Ende L	
61010.031	10765706	Profile rail II 1S	Profilschiene II 1S	
61010.032	10258828	Cyl.screw M6x16	Zyl.Schraube M6x16	
61010.033	10637430	Deflection sheet	Umlenkung Blech	
61010.034	10637426	Deflection profile	Umlenkung Profil	
61010.035	10637416	Washer	Scheibe	
61010.036	10630376	Profile rail end R	Profilschiene Ende R	
61010.036	10765705	Profile rail I 1S	Profilschiene I 1S	
61010.037	10936238	Supporting brace B R36	St?tzstrebe B R36	
61010.038	10258950	Cyl.screw M8x30	Zyl.Schraube M8x30	
61010.039	10813949	Guiding roll	F?hrungszylinder	
61010.040	10618209	Rest	St?tze	

R 36

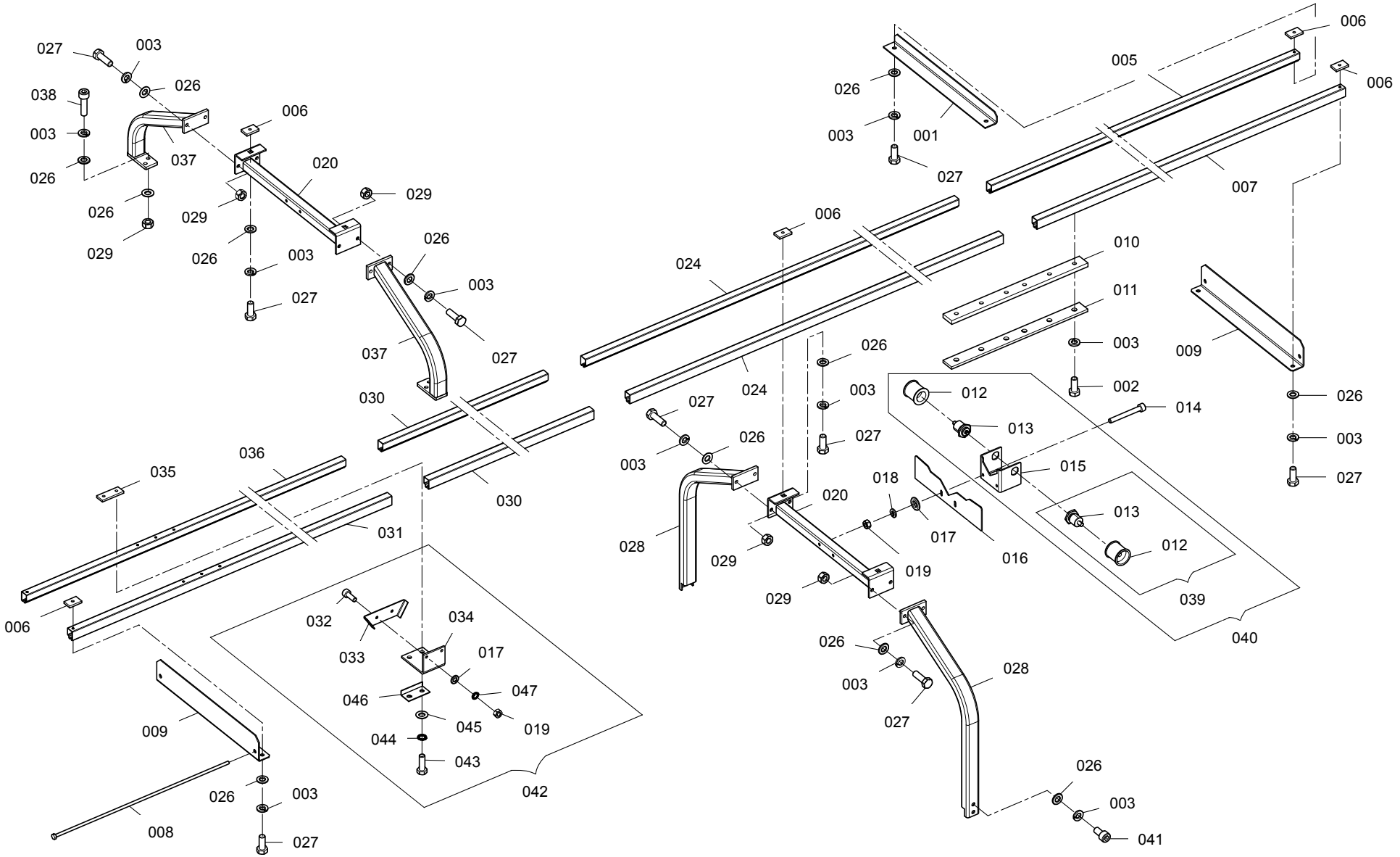

61010

RXX_6_10_10_102.cgm

Catalogue no. Katalog-Nr.	Part No. Material-Nr.	Part description en	Material-Bezeichnung de	Comment Bemerkung
61010.041	10258947	Cyl.screw M8x16	Zyl.Schraube M8x16	
61010.042	10637437	Deflection	Umlenkung	
61010.043	10259093	Hex. screw M10x30	6kt-Schraube M10x30	
61010.044	10259662	Locking washer 10.5/16	Sicherungsscheibe 10.5/16	
61010.045	10245270	Washer 10.5-St-140HV	Scheibe 10.5-St-140HV	
61010.046	11060571	Stop angle	Anschlagwinkel	
61010.047	10259659	Locking washer 6.4/10	Sicherungsscheibe 6.4/10	

R 36

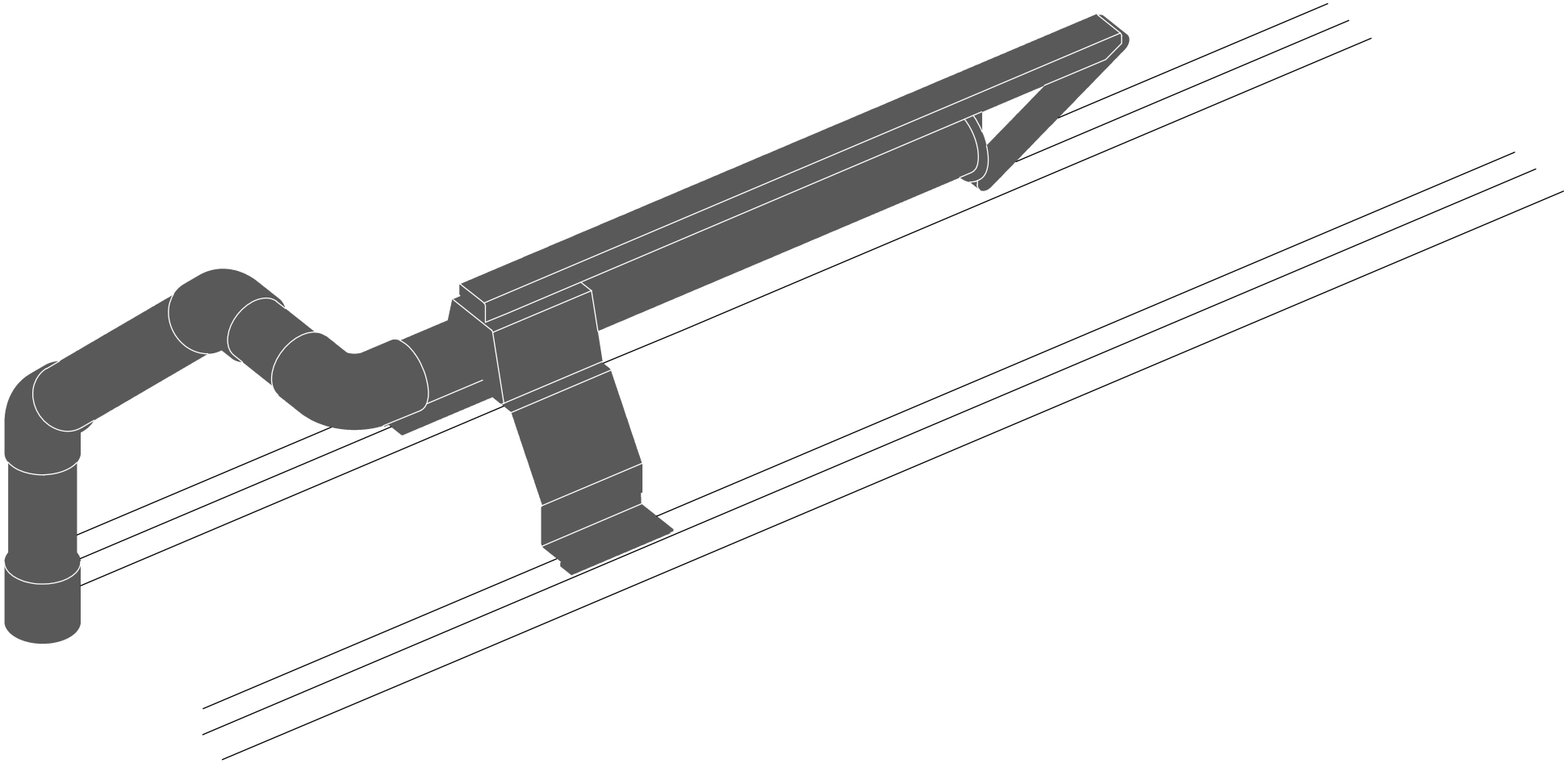

61020

Navi_6_10_20_01.cgm

R 36

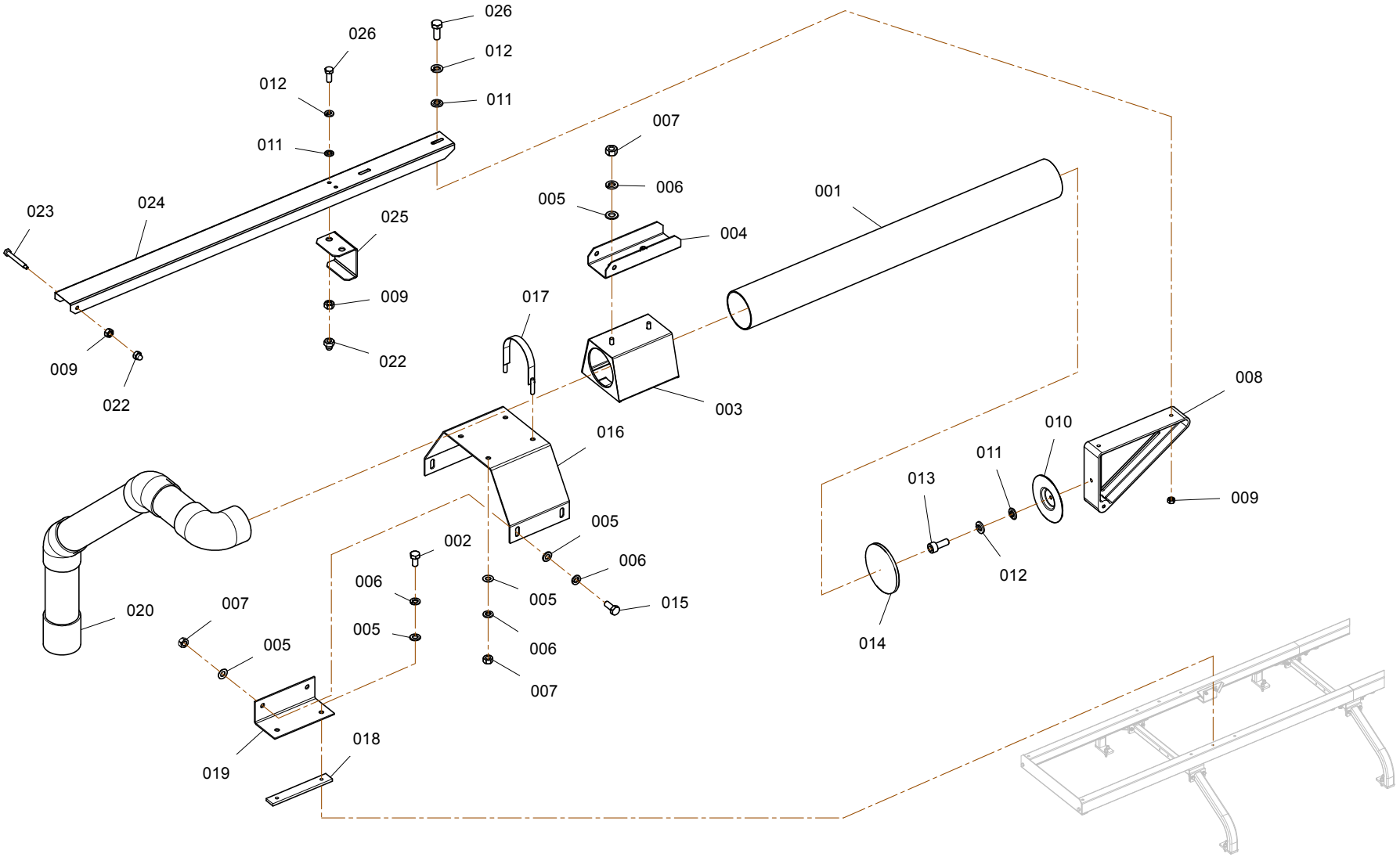

61020

RXX_6_10_20_101.cgm

Catalogue no. Katalog-Nr.	Part No. Material-Nr.	Part description en	Material-Bezeichnung de	Comment Bemerkung
61020.001	10634457	Suction tube	Absaugrohr	
61020.002	10259084	Hex. screw M8x16	6kt-Schraube M8x16	
61020.003	10634289	Cleading suction	Mantel Absaugung	
61020.004	10633914	Shank suction I.	Schenkel Absaugung I.	
61020.005	10259629	Washer 8.4-St-140HV	Scheibe 8.4-St-140HV	
61020.006	10338177	Spring ring 8	Federring 8	
61020.007	10259607	Hexagon nut M8-8	6kt-Mutter M8-8	
61020.008	10633545	Wedge	Keil	
61020.009	10431759	Hexagon nut M6-8	6kt-Mutter M6-8	
61020.010	10634347	Obstructor	Verschluss	
61020.011	10354210	Washer 6.4-St-140HV	Scheibe 6.4-St-140HV	
61020.012	10338176	Spring ring 6	Federring 6	
61020.013	10258828	Cyl.screw M6x16	Zyl.Schraube M6x16	
61020.014	10634350	Cover	Abdeckung	
61020.015	10259085	Hex. screw M8x20	6kt-Schraube M8x20	
61020.016	10633722	Cleading suction I.	Mantel Absaugung I.	
61020.017	10633894	Measuring bow	Messb?gel	
61020.018	10634867	Washer motor	Scheibe Motor	
61020.019	10634481	Tension support	Spannhalterung	
61020.020	10988428	Suction pipe ASS	Saugrohr ASS	
61020.022	10490411	Cap nut M6-6	6kt-Hutmutter M6-6	
61020.023	10634338	Contact screw	Kontaktschraube	
61020.024	10634461	Shank suction	Schenkel Absaugung	
61020.025	10634440	Stop bow	Abstellb?gel	
61020.026	10259080	Hex. screw M6x16	6kt-Schraube M6x16	

R 36

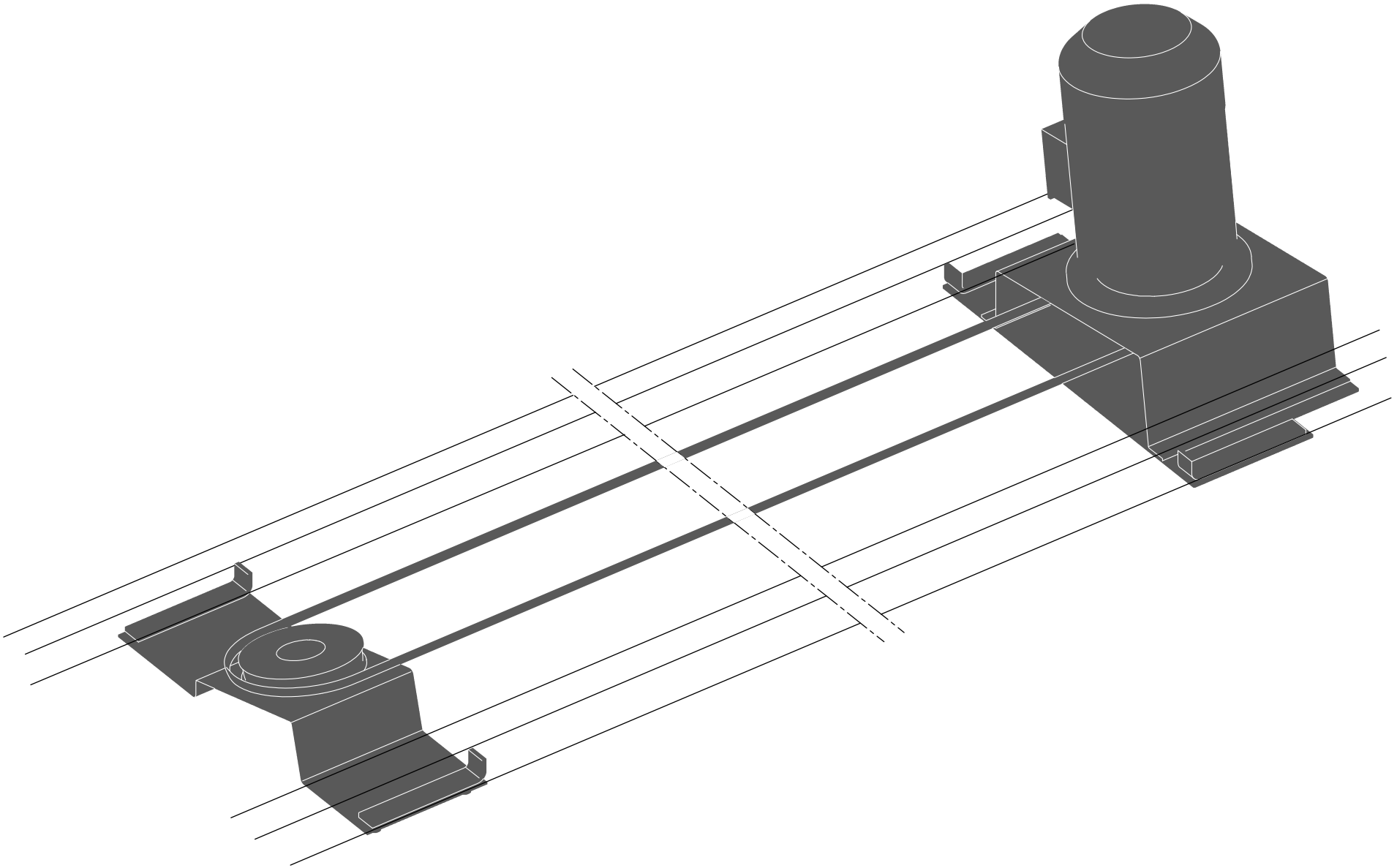

61030

Navi_6_10_30_01.cgm

R 36

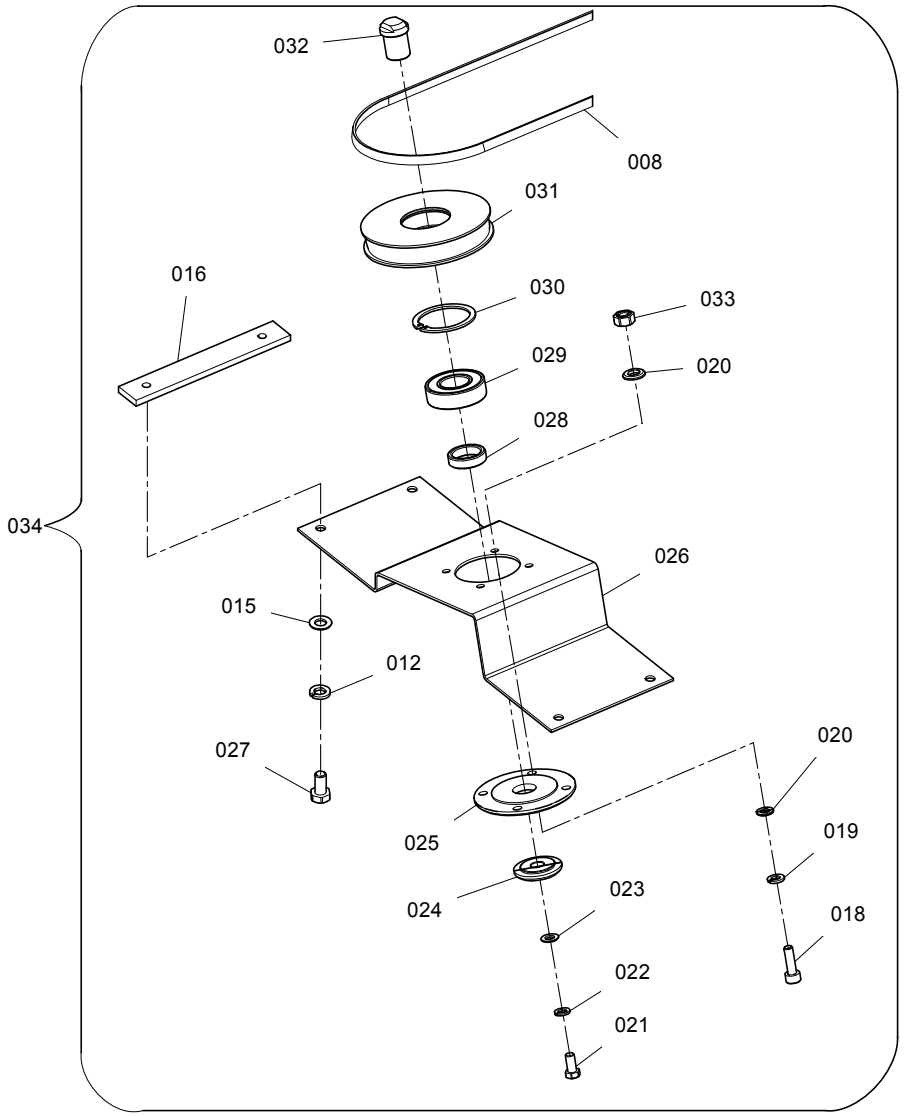

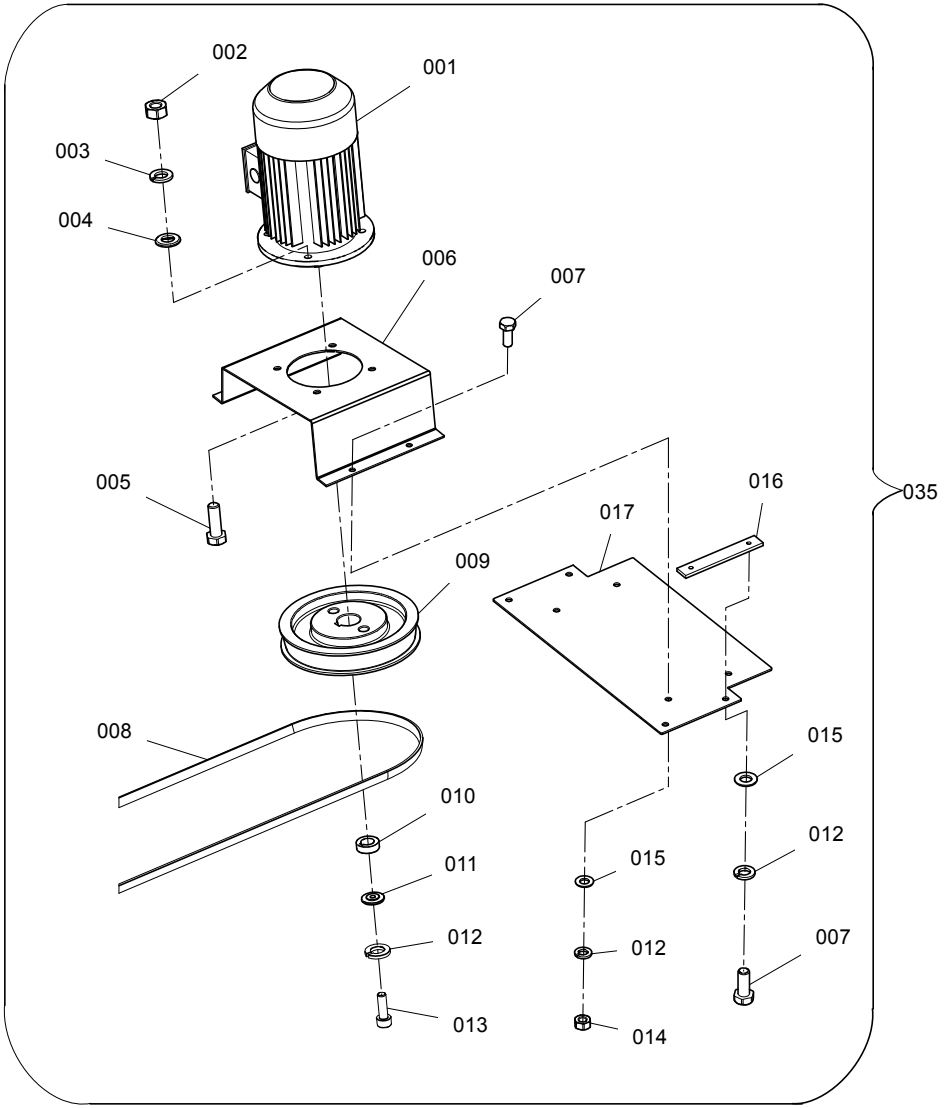

61030

RXX_6_10_30_101.cgm

Catalogue no. Katalog-Nr.	Part No. Material-Nr.	Part description en	Material-Bezeichnung de	Comment Bemerkung
61030.001	10610321	Motor 2.2 KW	Motor 2.2 KW	
61030.002	10431840	Hexagon nut M10-8	6kt-Mutter M10-8	
61030.003	10354212	Spring ring 10	Federring 10	
61030.004	10542604	Washer 10.5-St-200HV	Scheibe 10.5-St-200HV	
61030.005	10259093	Hex. screw M10x30	6kt-Schraube M10x30	
61030.006	10636928	Sheet II.	Blech II.	
61030.007	10259085	Hex. screw M8x20	6kt-Schraube M8x20	
61030.008	10642453	Belt blower - 20S	Riemen Gebl?se - 20S	
61030.008	10642461	Belt 18S	Riemen 18S	
61030.008	10643131	Belt 17S	Riemen 17S	
61030.008	10643132	Belt 16S	Riemen 16S	
61030.008	10644058	Belt 15S	Riemen 15S	
61030.008	10644067	Belt 14S	Riemen 14S	
61030.008	10644078	Belt 13S	Riemen 13S	
61030.008	10644434	Belt 12S	Riemen 12S	
61030.008	10644435	Belt 11S	Riemen 11S	
61030.008	10644436	Belt 10S	Riemen 10S	
61030.008	10645163	Belt 19S	Riemen 19S	
61030.008	10741002	Belt OT - 22S	Riemen OT - 22S	
61030.008	10742226	Belt OT - 23S	Riemen OT - 23S	
61030.008	10757981	Belt 5S	Riemen 5S	
61030.008	10764519	Belt OT - 21S	Riemen OT - 21S	
61030.008	10765588	Belt 9S	Riemen 9S	
61030.008	10765624	Belt 8S	Riemen 8S	
61030.008	10765687	Belt 7S	Riemen 7S	
61030.008	10765707	Belt 1S	Riemen 1S	
61030.008	10765722	Belt 6S	Riemen 6S	
61030.008	10765725	Belt 4S	Riemen 4S	
61030.008	10765727	Belt 3S	Riemen 3S	
61030.008	10765728	Belt 2S	Riemen 2S	
61030.008	10801190	Belt OT - 25S	Riemen OT - 25S	
61030.008	10919741	Belt OT - 24S	Riemen OT - 24S	

R 36

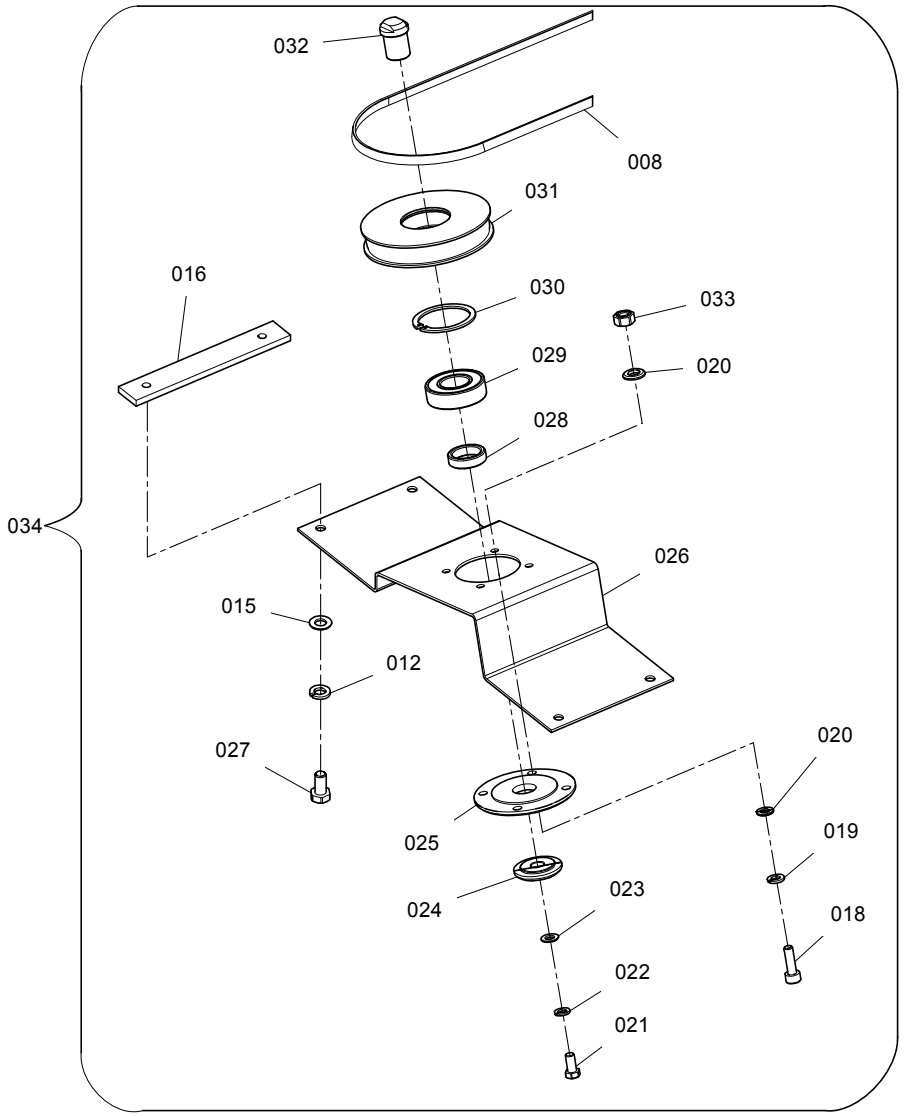

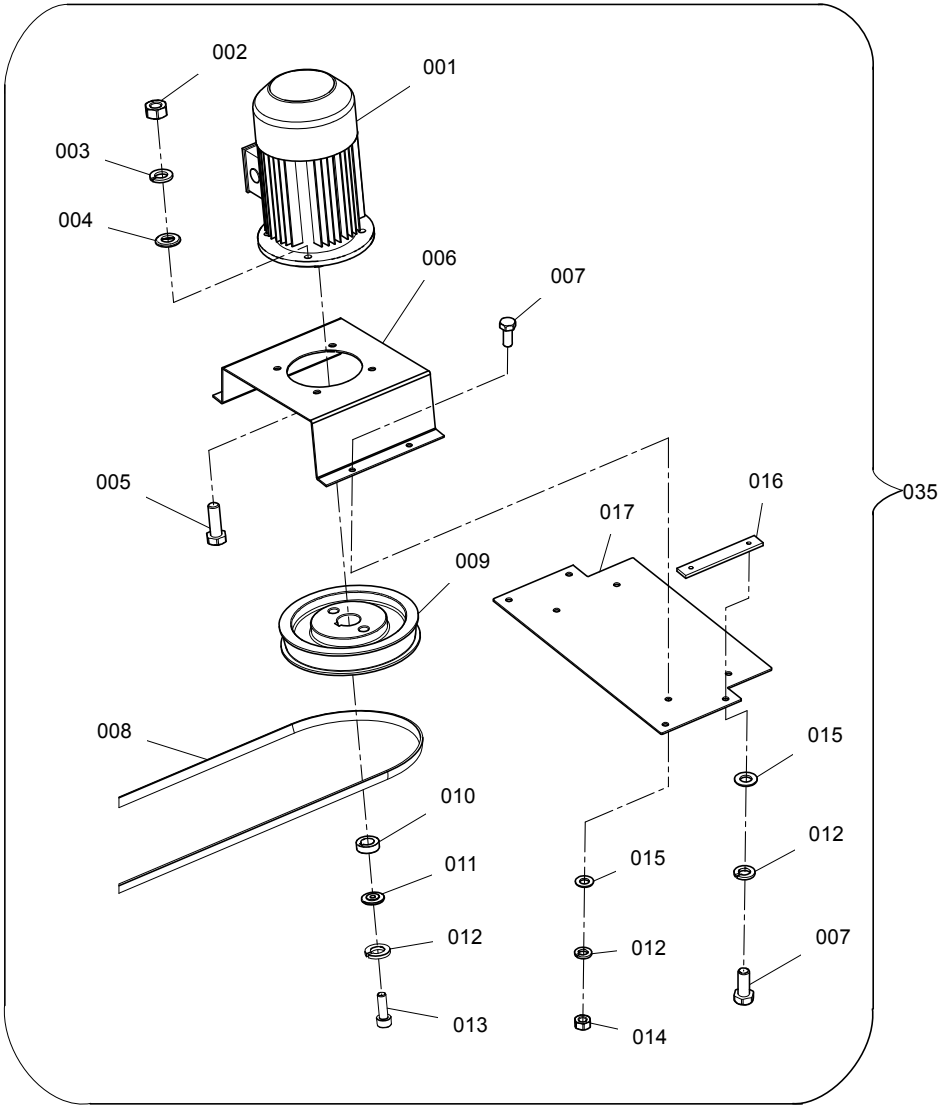

61030

RXX_6_10_30_101.cgm

Catalogue no. Katalog-Nr.	Part No. Material-Nr.	Part description en	Material-Bezeichnung de	Comment Bemerkung
61030.008	10938805	Belt OT - 28S	Riemen OT - 28S	
61030.008	10938806	Belt OT - 29S	Riemen OT - 29S	
61030.008	10938807	Belt OT - 30S	Riemen OT - 30S	
61030.008	10938814	Belt OT - 26S	Riemen OT - 26S	
61030.008	10938815	Belt OT - 27S	Riemen OT - 27S	
61030.009	10636948	Pulley 50 HZ - BP	Riemenscheibe 50 HZ - BP	
61030.010	10636945	Bushing	Buchse	
61030.011	10636925	Locking washer	Sicherungsscheibe	
61030.012	10338177	Spring ring 8	Federring 8	
61030.013	10258949	Cyl.screw M8x25	Zyl.Schraube M8x25	
61030.014	10259607	Hexagon nut M8-8	6kt-Mutter M8-8	
61030.015	10259629	Washer 8.4-St-140HV	Scheibe 8.4-St-140HV	
61030.016	10634471	Belt tightener	Riemenspanner	
61030.017	10764831	Sheet I.	Blech I.	
61030.018	10259461	Cyl.screw M6x20	Zyl.Schraube M6x20	
61030.019	10338176	Spring ring 6	Federring 6	
61030.020	10354210	Washer 6.4-St-140HV	Scheibe 6.4-St-140HV	
61030.021	10259096	Hex. screw M12x25	6kt-Schraube M12x25	
61030.022	10356572	Spring ring 12	Federring 12	
61030.023	10455614	Washer 13-St-200HV	Scheibe 13-St-200HV	
61030.024	10637606	Locking washer	Sicherungsscheibe	
61030.025	10637592	Washer	Scheibe	
61030.026	10637598	Sheet	Blech	
61030.027	10259084	Hex. screw M8x16	6kt-Schraube M8x16	
61030.028	10637492	Backup ring	St?tzring	
61030.029	10504731	Deep-groove ball bearing 25/52x15-6205-2	Ri.Kugellager 25/52x15-6205-2RS	
61030.030	10355084	Locking ring 52x2	Sicherungsring 52x2	
61030.031	10637477	Pulley BC	Riemenscheibe BC	
61030.032	10637493	Flanged bolt	Bundbolzen	
61030.033	10431759	Hexagon nut M6-8	6kt-Mutter M6-8	

R 36

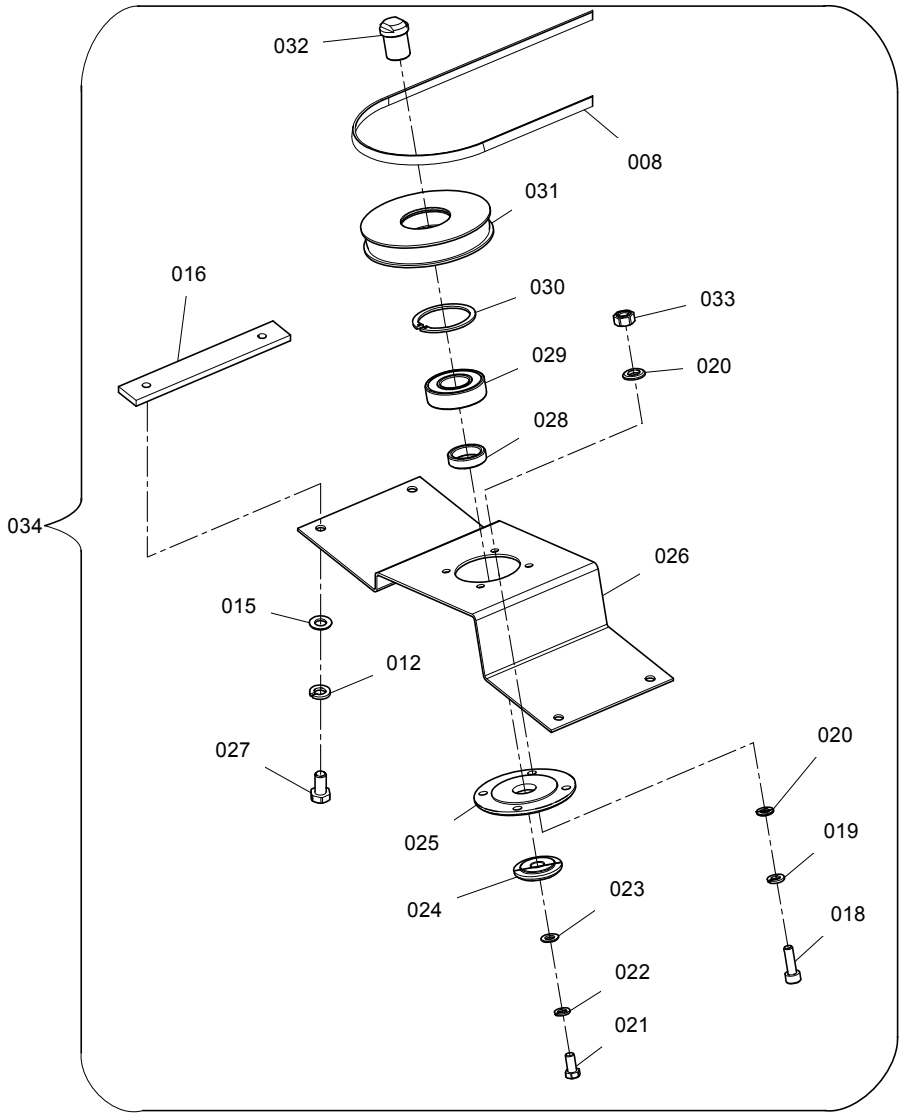

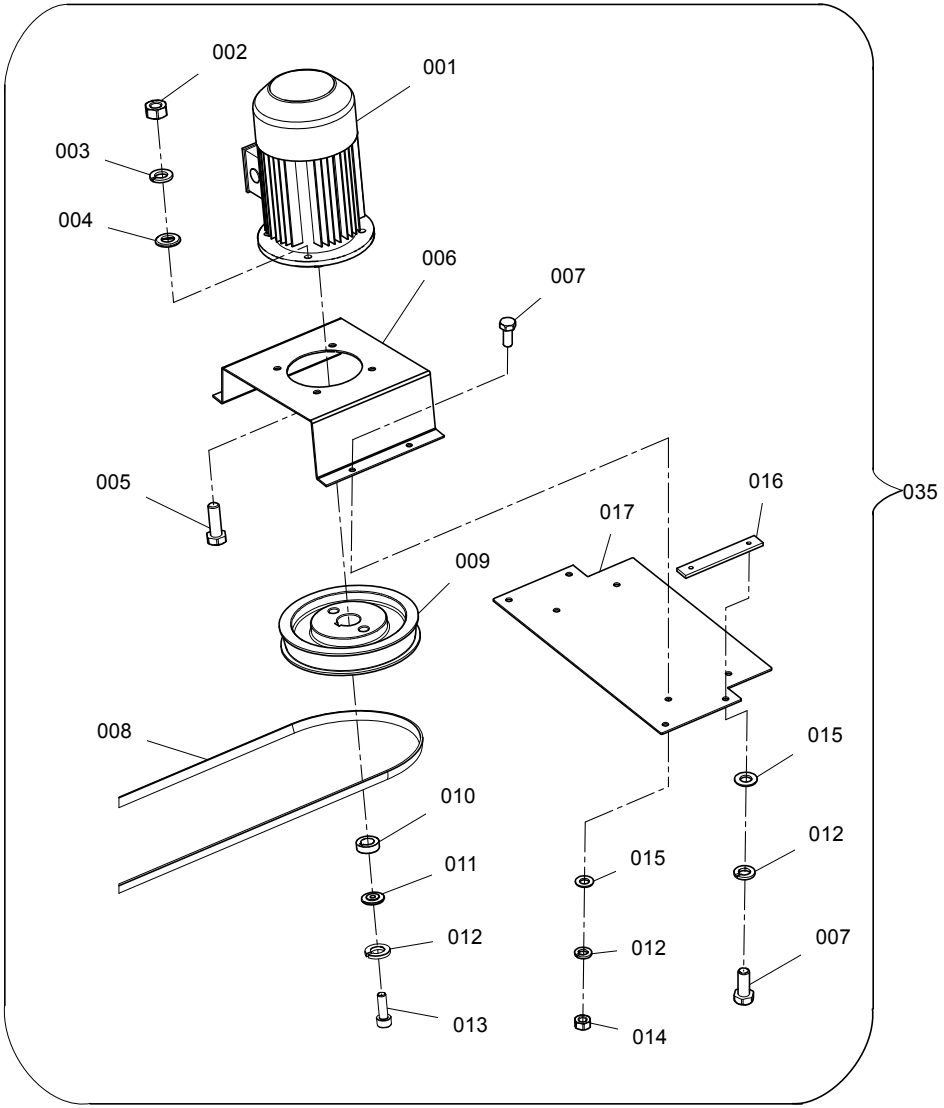

61030

RXX_6_10_30_101.cgm

Catalogue no. Katalog-Nr.	Part No. Material-Nr.	Part description en	Material-Bezeichnung de	Comment Bemerkung
61030.034	10637604	Pulley BC ASSEMBLY	Riemenscheibe BC ASSEMBLY	
61030.035	10764834	Drive motor 50HZ R 35	Fahrmotor 50HZ R 35	

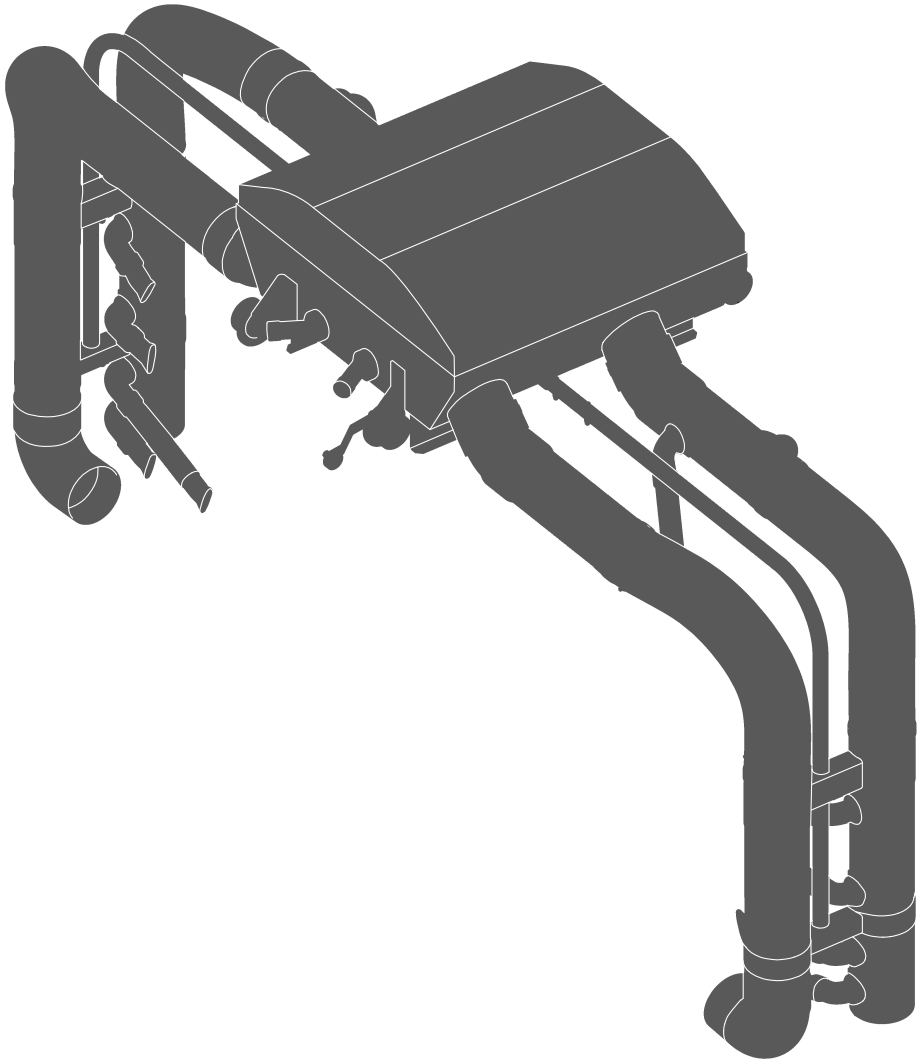

R 36

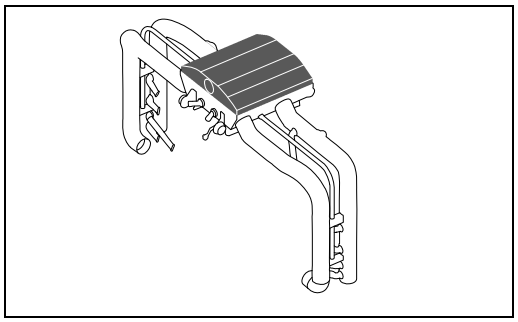

62010

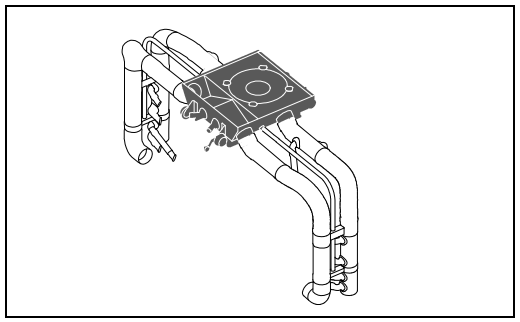

62020

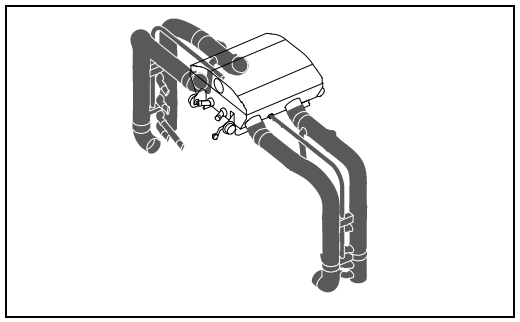

62030

R 36

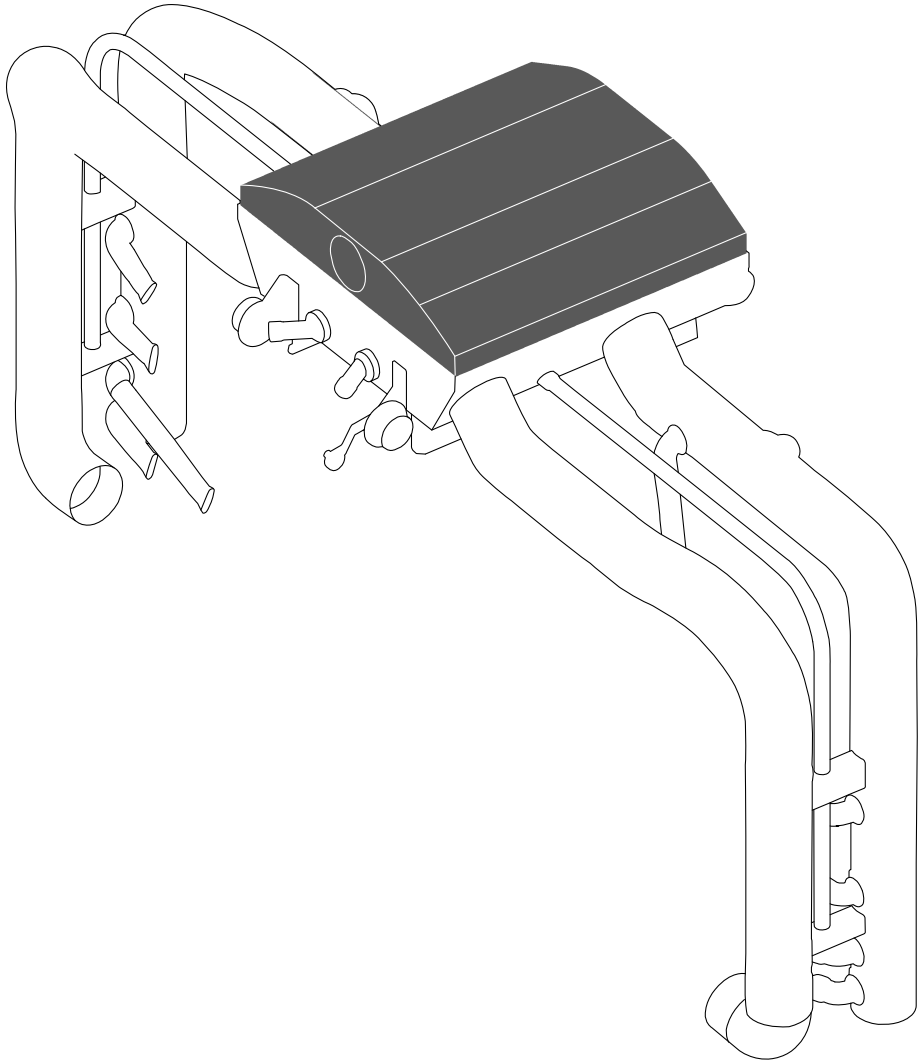

62010

Navi_6_20_10_01.cgm

R 36

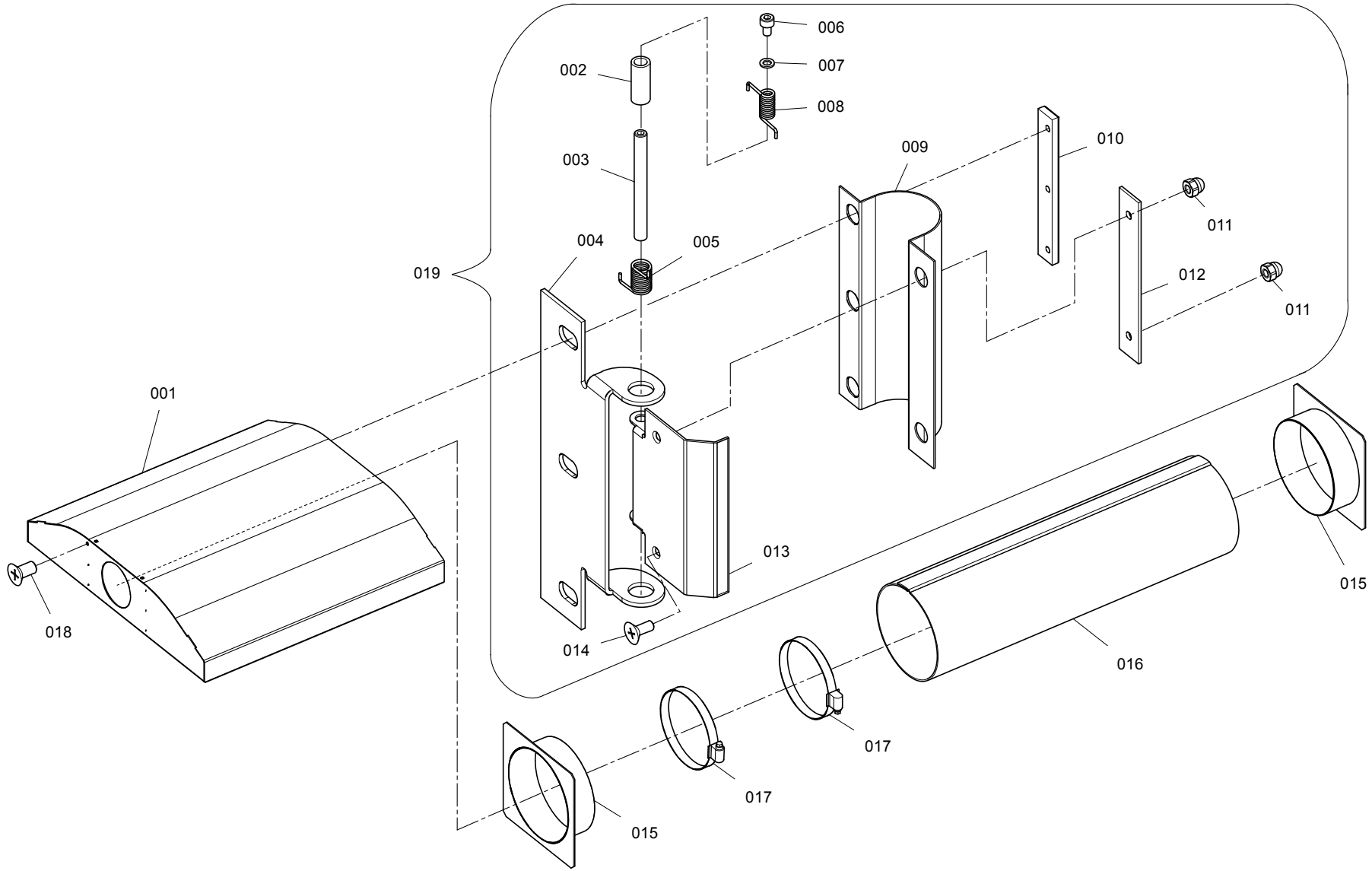

62010

RXX_6_20_10_101.cgm

Catalogue no. Katalog-Nr.	Part No. Material-Nr.	Part description en	Material-Bezeichnung de	Comment Bemerkung
62010.001	10638318	Lid complete	Deckel komplett	
62010.002	10637587	Separator ring	Trennring	
62010.003	10642346	Pin shaft	Stift Welle	
62010.004	10637961	Hinge plate	Scharnierplatte	
62010.005	10637936	Torsion spring R	Torsionsfeder R	
62010.006	10258910	Cyl.screw M5x8	Zyl.Schraube M5x8	
62010.007	10259623	Washer 5.3-St-200HV	Scheibe 5.3-St-200HV	
62010.008	10637879	Torsion spring L	Torsionsfeder L	
62010.009	10637639	Protective plate	Schutzplatte	
62010.010	10637635	Screw connection piece	Anschraubstutzen	
62010.011	10533118	Cap nut M4-6	6kt-Hutmutter M4-6	
62010.012	10637892	Pressure plate	Druckplatte	
62010.013	10638103	Movable plate	Verschiebeplatte	
62010.014	10356173	Socket flat head screw M4x10	Senkschraube M4x10	
62010.015	10638336	Wire mesh connection	Drahtgewebe Verbindung	
62010.016	10638337	Wire mesh	Drahtgewebe	
62010.017	10622017	Tube clip A-110-130-W1-2	Schlauchklemme A-110-130-W1-2	
62010.018	10356174	Socket flat head screw M5x10	Senkschraube M5x10	
62010.019	10638109	Spring support	Federtr?ger	

R 36

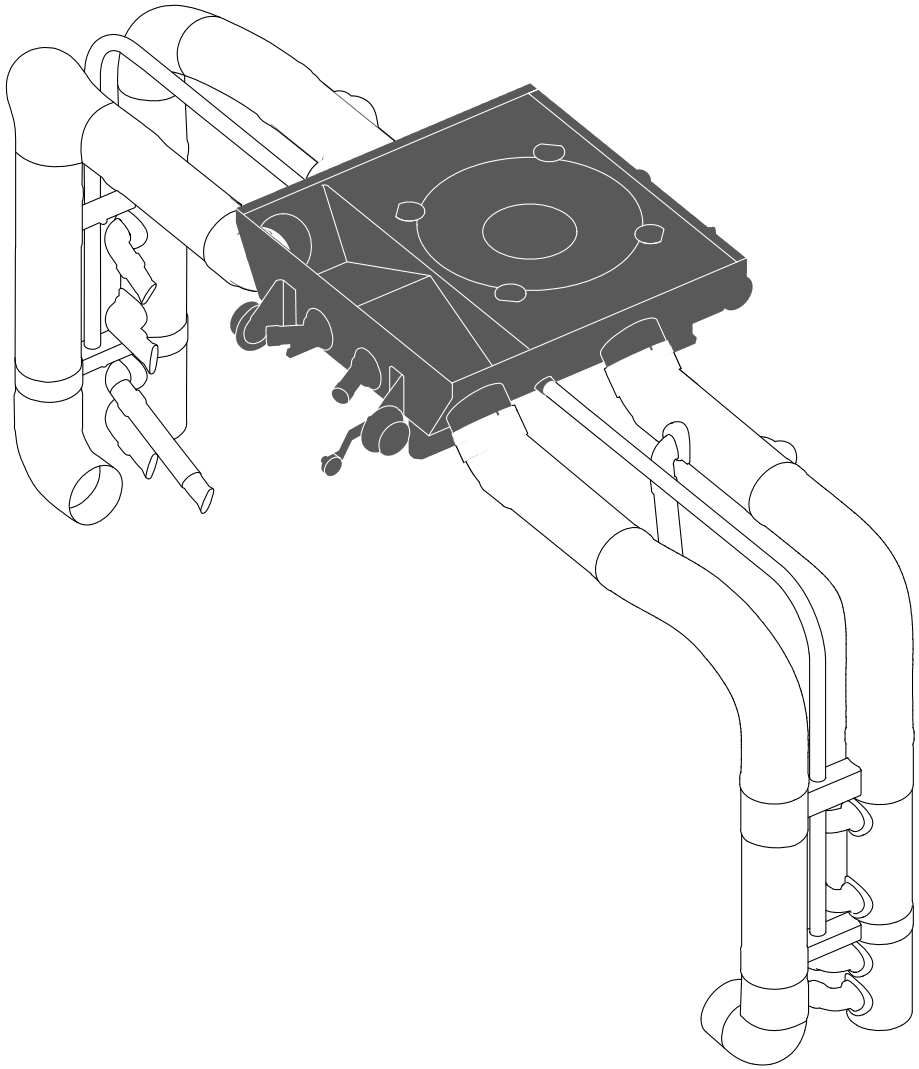

62020

Navi_6_20_20_01.cgm

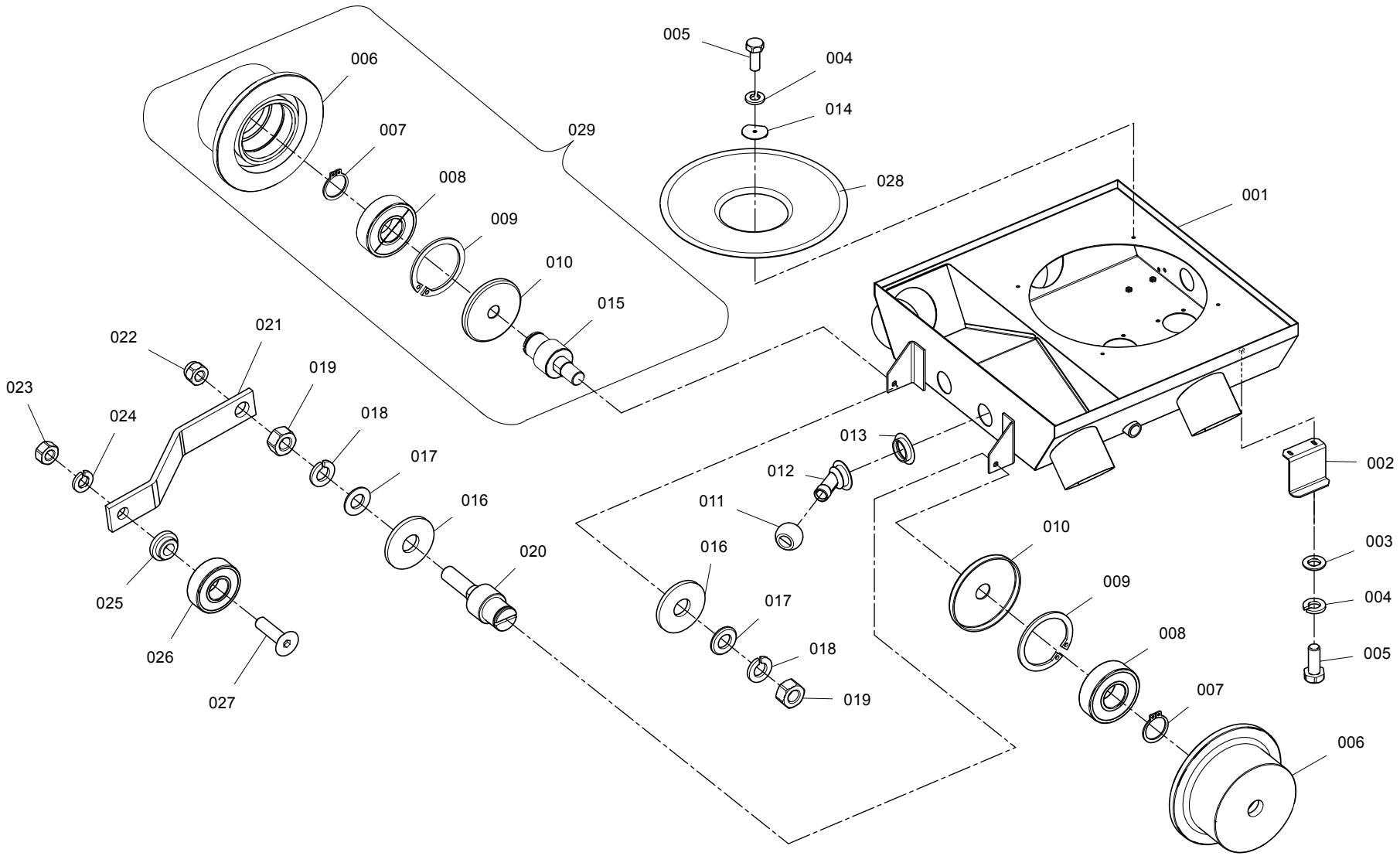

RXX_6_20_20_101.cgm

Customer/Kunde	Type of machine/Maschinentyp	Serial no./Serial Nr.	Page/Seite	Date /Datum
N Z Textile Ltd	**R 36**	**40021927-00054...00055**	**1/1**	**01.09.2017**

58361

Catalogue no. Katalog-Nr.	Part No. Material-Nr.	Part description en	Material-Bezeichnung de	Comment Bemerkung
62020.001	10638443	Drive frame welded	Fahrgestell geschweisst	
62020.002	10638438	Safety clump	Sicherheitsklotz	
62020.003	10354210	Washer 6.4-St-140HV	Scheibe 6.4-St-140HV	
62020.004	10338176	Spring ring 6	Federring 6	
62020.005	10259080	Hex. screw M6x16	6kt-Schraube M6x16	
62020.006	10637700	Wheel	Rad	
62020.007	10259514	Locking ring 17x1	Sicherungsring 17x1	
62020.008	10522333	Deep-groove ball bearing 17/40x12-6203-2	Ri.Kugellager 17/40x12-6203-2RS	
62020.009	10355081	Locking ring 40x1.75	Sicherungsring 40x1.75	
62020.010	10637722	Covering	Verkleidung	
62020.011	10496352	Nozzle	D?se	
62020.012	10638822	Elbow 30	Kr?mmer 30	
62020.013	10638122	Adapter sleeve	Spannh?lse	
62020.014	10638435	Pressure assembly platform	Pression Montageplatte	
62020.015	10637649	Tappet	Zapfen	
62020.016	10437500	Washer 13-St-100HV	Scheibe 13-St-100HV	
62020.017	10542604	Washer 10.5-St-200HV	Scheibe 10.5-St-200HV	
62020.018	10354212	Spring ring 10	Federring 10	
62020.019	10431840	Hexagon nut M10-8	6kt-Mutter M10-8	
62020.020	10638753	Tappet I.	Zapfen I.	
62020.021	10638510	Shank	Schenkel	
62020.022	10622803	Hexagon nut M8-8	6kt-Mutter M8-8	
62020.023	10259607	Hexagon nut M8-8	6kt-Mutter M8-8	
62020.024	10338177	Spring ring 8	Federring 8	
62020.025	10638521	Washer II.	Scheibe II.	
62020.026	10356599	Deep-groove ball bearing 15/35x11-6202-2	Ri.Kugellager 15/35x11-6202-2RS	
62020.027	10259325	Socket flat head screw M8x30	Senkschraube M8x30	
62020.028	10638742	Suction insert	Saugeinsatz	
62020.029	10637725	Wheel complete	Rad komplett	

R 36

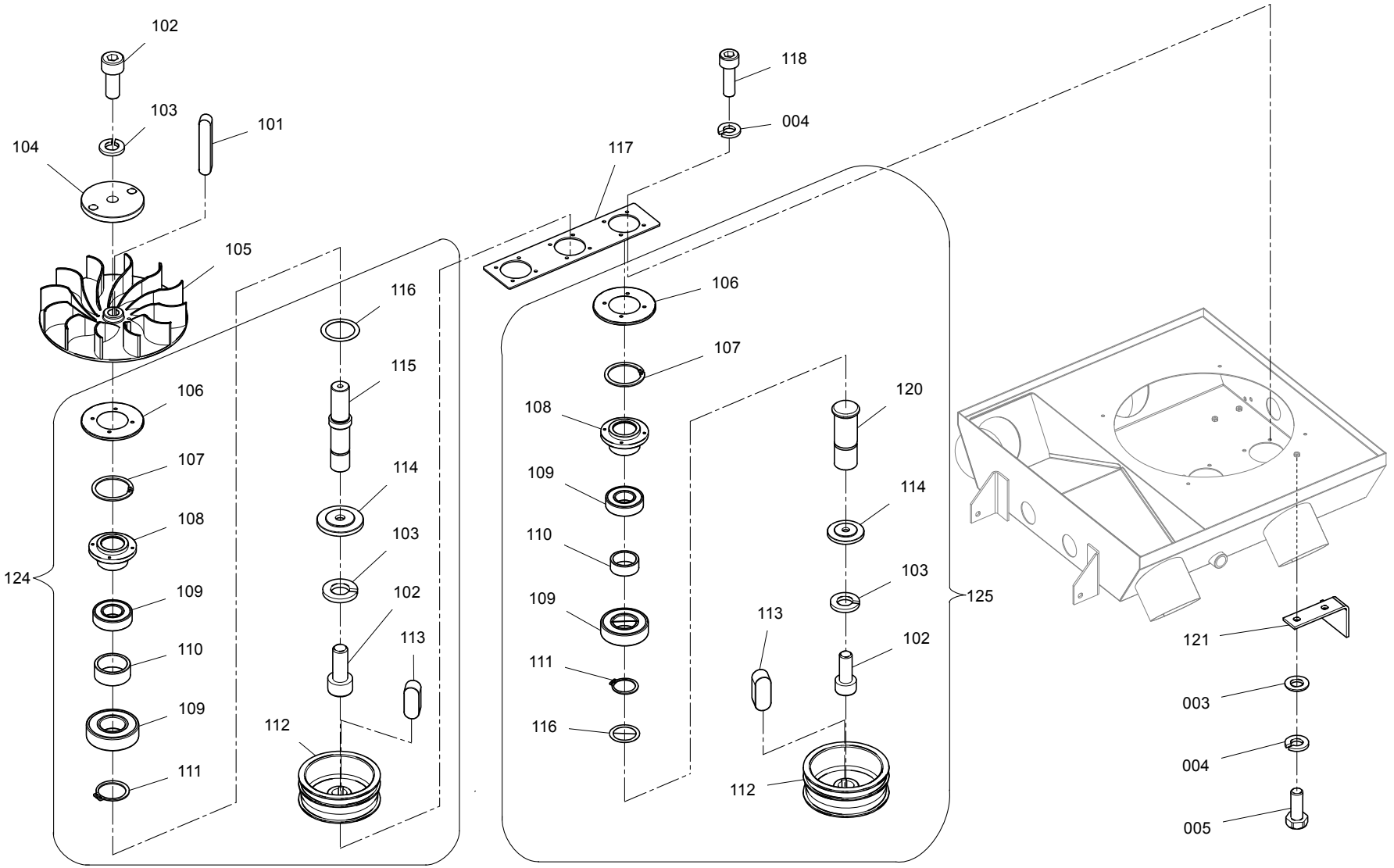

62020

RXX_6_20_20_201.cgm

Catalogue no. Katalog-Nr.	Part No. Material-Nr.	Part description en	Material-Bezeichnung de	Comment Bemerkung
62020.003	10354210	Washer 6.4-St-140HV	Scheibe 6.4-St-140HV	
62020.004	10338176	Spring ring 6	Federring 6	
62020.005	10259080	Hex. screw M6x16	6kt-Schraube M6x16	
62020.101	10355948	Parallel key 8x7x45-C45+C	Passfeder 8x7x45-C45+C	
62020.102	10258948	Cyl.screw M8x20	Zyl.Schraube M8x20	
62020.103	10338177	Spring ring 8	Federring 8	
62020.104	10638417	Press plate	Pressplatte	
62020.105	10624683	Rotor fan D = 330mm	Rotor Ventilator D = 330mm	
62020.106	10638144	Covering pane	Abdeckscheibe	
62020.107	10355084	Locking ring 52x2	Sicherungsring 52x2	
62020.108	10638107	Hub	Nabe	
62020.109	10504731	Deep-groove ball bearing 25/52x15-6205-2	Ri.Kugellager 25/52x15-6205-2RS	
62020.110	10638105	Backup ring	St?tzring	
62020.111	10259649	Locking ring 25x1.2	Sicherungsring 25x1.2	
62020.112	10638104	Pulley D136	Riemenscheibe D136	
62020.113	10259337	Parallel key 8x7x20-C45+C	Passfeder 8x7x20-C45+C	
62020.114	10638125	Press cover	Pressionsdeckel	
62020.115	10638126	Guide bolt	F?hrungsbolzen	
62020.116	10638182	Washer 25x33x1,2	Scheibe 25x33x1,2	
62020.117	10638327	Sheet inside	Blech innen	
62020.118	10259461	Cyl.screw M6x20	Zyl.Schraube M6x20	
62020.120	10638183	Flanged bolt	Bundbolzen	
62020.121	10612793	Locking bracket	Sicherungswinkel	
62020.124	10638185	Pulley I	Riemenscheibe I	
62020.125	10638215	Pulley II	Riemenscheibe II	

R 36

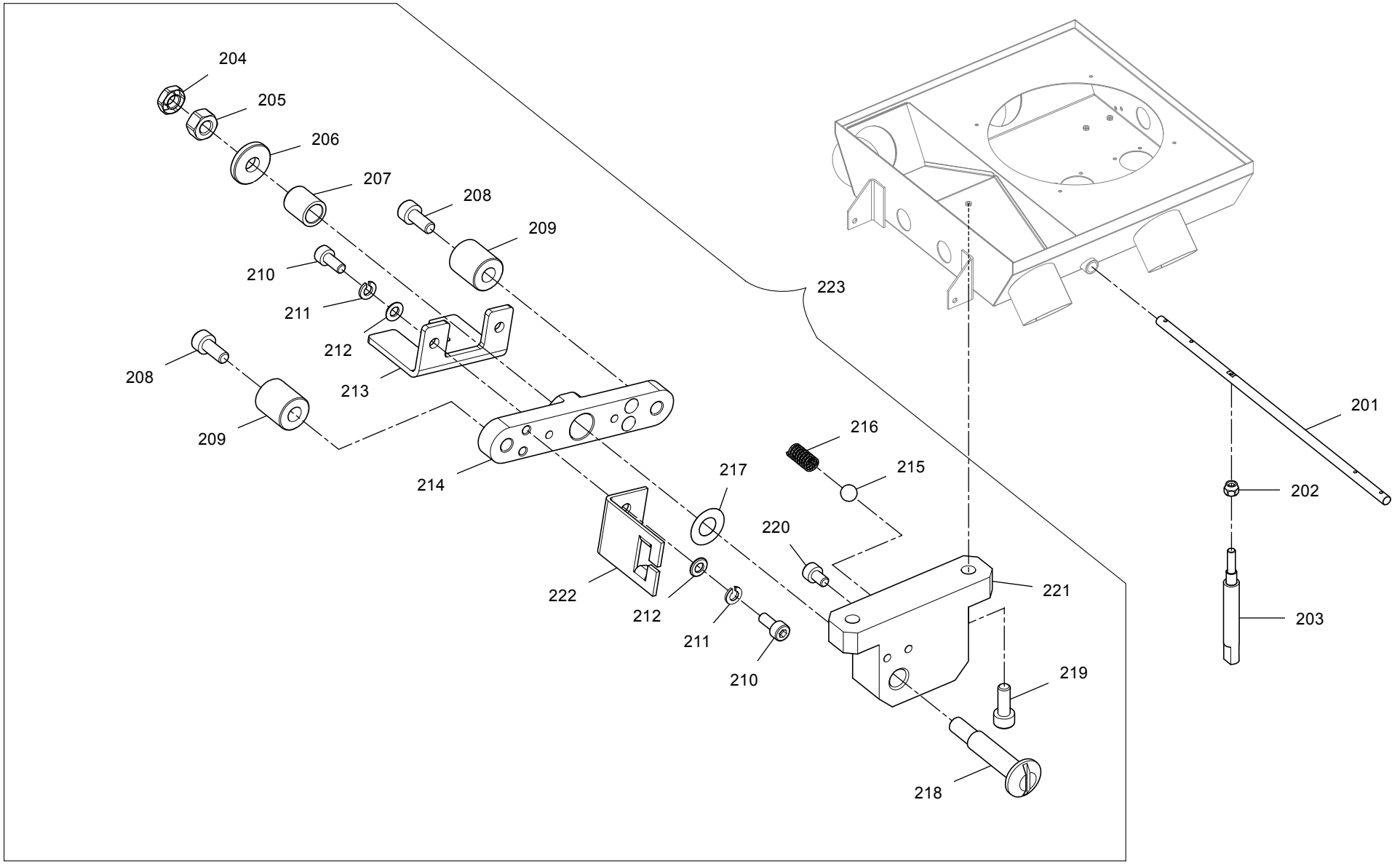

62020

RXX_6_20_20_301.cgm

Catalogue no. Katalog-Nr.	Part No. Material-Nr.	Part description en	Material-Bezeichnung de	Comment Bemerkung
62020.201	10638506	Swing lever	Schwinghebel	
62020.202	10603912	Hexagon nut M6-8	6kt-Mutter M6-8	
62020.203	10612740	Adjusting bolt	Verstellbolzen	
62020.204	10259611	Hexagon nut M8-04	6kt-Mutter M8-04	
62020.205	10259607	Hexagon nut M8-8	6kt-Mutter M8-8	
62020.206	10637755	Washer 8x22/3,5	Scheibe 8x22/3,5	
62020.207	10720612	Bushing IGUS MSM 1014-16 IGLIDUR M250	Buchse IGUS MSM 1014-16 IGLIDUR M250	
62020.208	8504031	Cyl.screw M8x22	Zyl.Schraube M8x22	
62020.209	10637737	Cylinder cover	Trommelverdeck	
62020.210	10258912	Cyl.screw M5x12	Zyl.Schraube M5x12	
62020.211	10338175	Spring ring 5	Federring 5	
62020.212	10245275	Washer 5.3-St-140HV	Scheibe 5.3-St-140HV	
62020.213	10708649	Guide bridge	F?hrungsbr?cke	
62020.214	10708658	Exchange component I	Austauschkomponente I	
62020.215	10534177	Ball 8-G28	Kugel 8-G28	
62020.216	10637760	Pressure spring 0,8x7x16	Druckfeder 0,8x7x16	
62020.217	10637751	Washer 10x20/0,1	Scheibe 10x20/0,1	
62020.218	10637756	Tappet II	Zapfen II	
62020.219	10258828	Cyl.screw M6x16	Zyl.Schraube M6x16	
62020.220	10258910	Cyl.screw M5x8	Zyl.Schraube M5x8	
62020.221	10637758	Fixing device	Halterung	
62020.222	10637740	Fork	Gabel	
62020.223	10708685	Rotary head MODI	Drehkopf MODI	

R 36

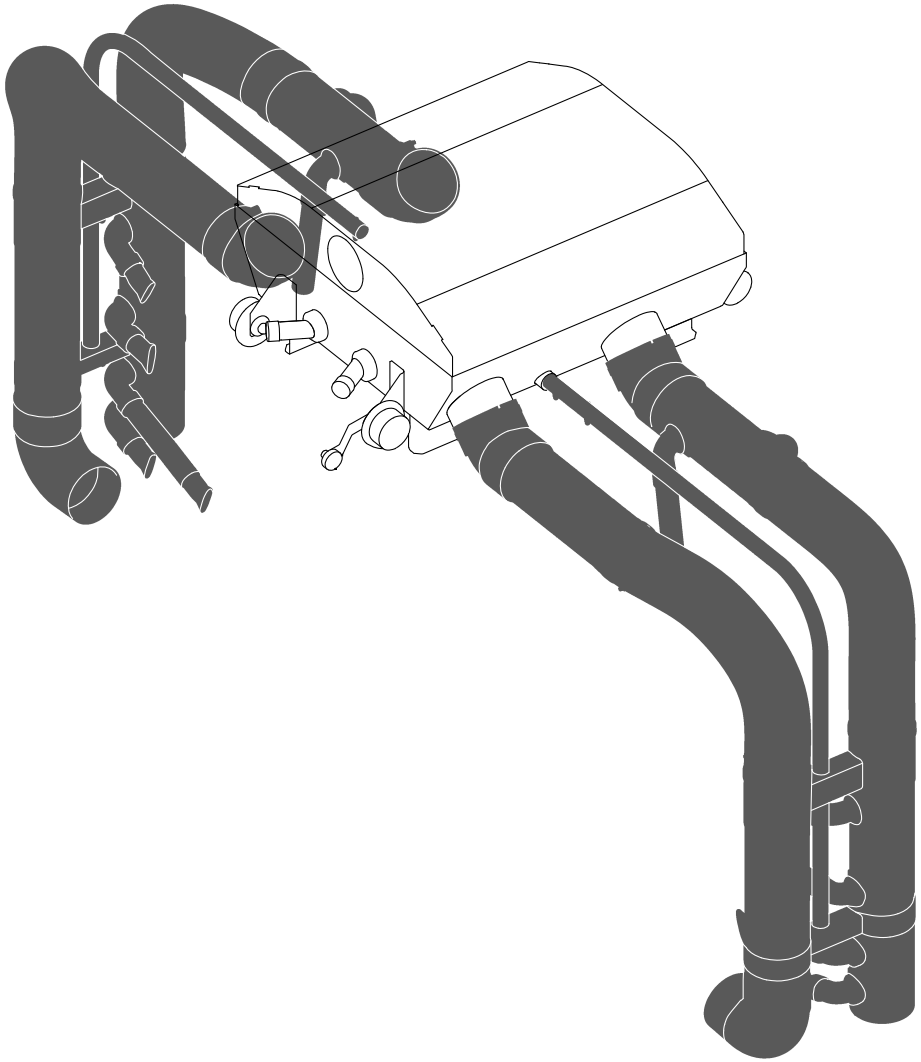

62030

Navi_6_20_30_01.cgm

R 36

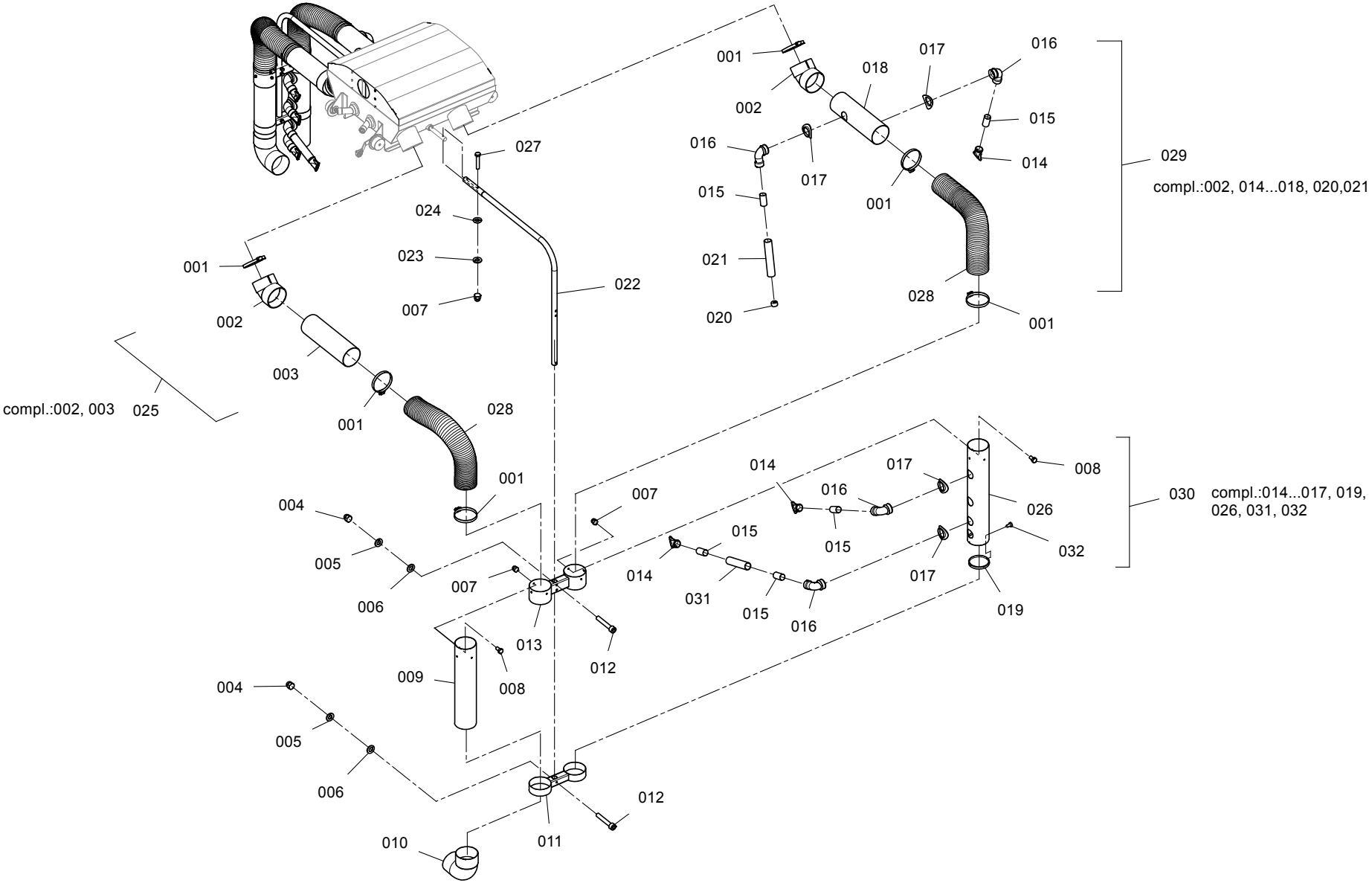

62030

RXX_6_20_30_101.cgm

Catalogue no. Katalog-Nr.	Part No. Material-Nr.	Part description en	Material-Bezeichnung de	Comment Bemerkung
62030.001	10622017	Tube clip A-110-130-W1-2	Schlauchklemme A-110-130-W1-2	
62030.002	10638097	Elbow pipe 45	Kr?mmer Rohr 45	
62030.003	10638964	Tube duct suction	H?lsenkanal Absaugung	
62030.004	10242109	Cap nut M8-6	6kt-Hutmutter M8-6	
62030.005	10338177	Spring ring 8	Federring 8	
62030.006	10580160	Washer 8.4-St-200HV	Scheibe 8.4-St-200HV	
62030.007	10354155	Cap nut M6-6	6kt-Hutmutter M6-6	
62030.008	10259079	Hex. screw M6x12	6kt-Schraube M6x12	
62030.009	10638243	Pipe	Rohr	
62030.010	10617566	Cover tube	Abdeckrohr	
62030.011	10920804	Connecting pipe II	Verbindungsrohr II	
62030.012	10258955	Cyl.screw M8x50	Zyl.Schraube M8x50	
62030.013	10920765	Connecting pipe I	Verbindungsrohr I	
62030.014	10637910	Nozzle	D?se	
62030.015	10637967	Empty tube D32	Lehrh?lse D32	
62030.016	10637594	Pipe elbow	Rohrkr?mmer	
62030.017	10638122	Adapter sleeve	Spannh?lse	
62030.018	10847506	Tube duct blower	H?lsenkanal Gebl?se	
62030.019	10637933	Stopper	Stopfen	
62030.020	10821940	Nozzle	D?se	
62030.021	10821625	Extension tube	Verl?ngerung H?lse	
62030.022	10920740	Swivel arm II	Schwenkarm II	
62030.023	10338176	Spring ring 6	Federring 6	
62030.024	10354210	Washer 6.4-St-140HV	Scheibe 6.4-St-140HV	
62030.025	10638965	Suction pipe elbow	Absaugrohrbogen	
62030.026	10937272	Blowing pipe	Abblasrohr	
62030.027	10259344	Hex. screw M6x35	6kt-Schraube M6x35	
62030.028	10621932	Hose PVC - S161 BL 110 mm	Schlauch PVC - S161 BL 110 mm	
62030.029	10848385	Pipe elbow L	Rohrkr?mmer L	

R 36

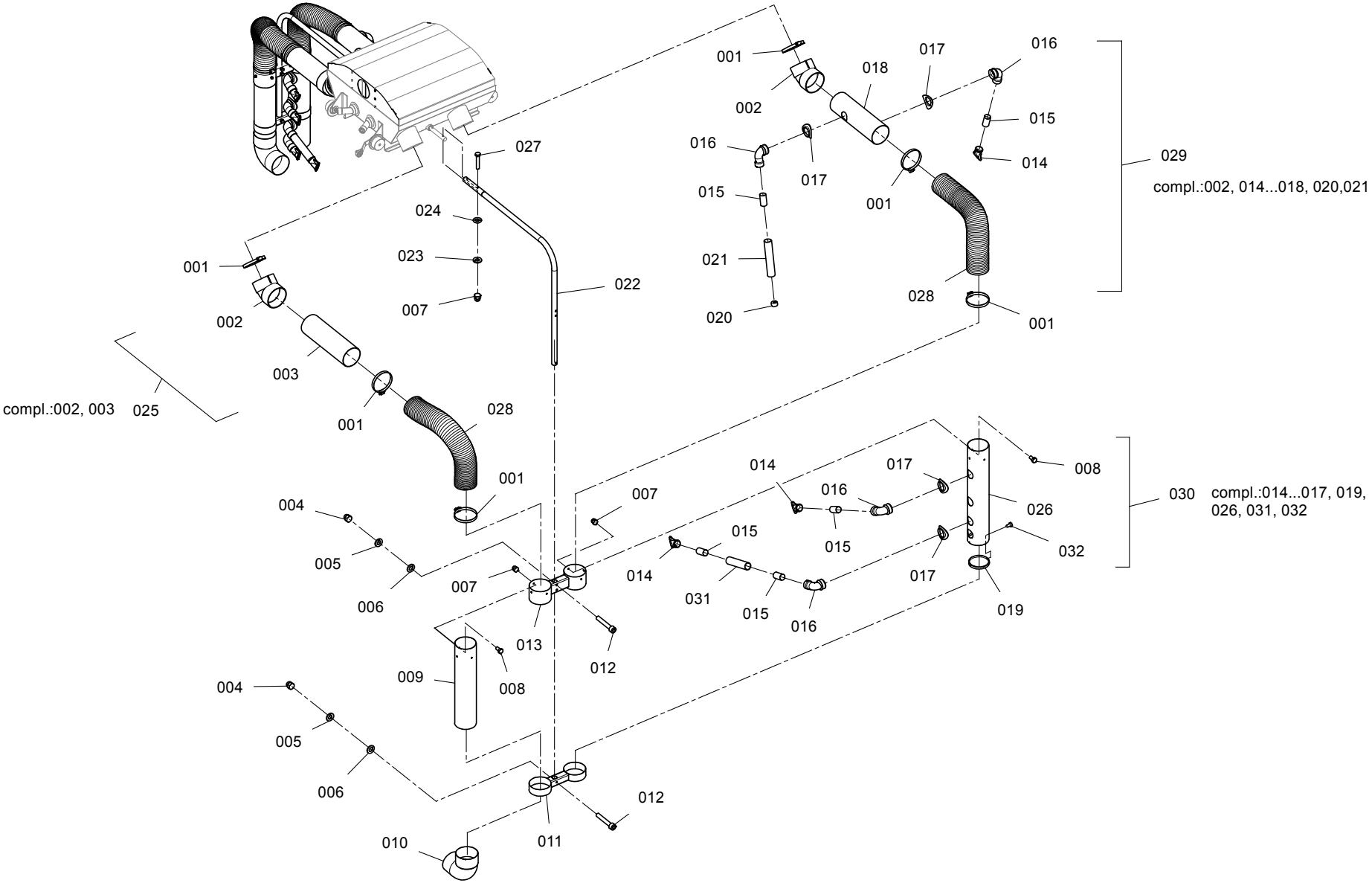

62030

RXX_6_20_30_101.cgm

Catalogue no. Katalog-Nr.	Part No. Material-Nr.	Part description en	Material-Bezeichnung de	Comment Bemerkung
62030.030	10938643	Blowing pipe L	Abblasrohr L	
62030.031	10852553	Extension tube L=60	Verl?ngerung H?lse L=60	
62030.032	10356064	Oval head screw ST3.9x9.5-F-H	Linsenschraube ST3.9x9.5-F-H	

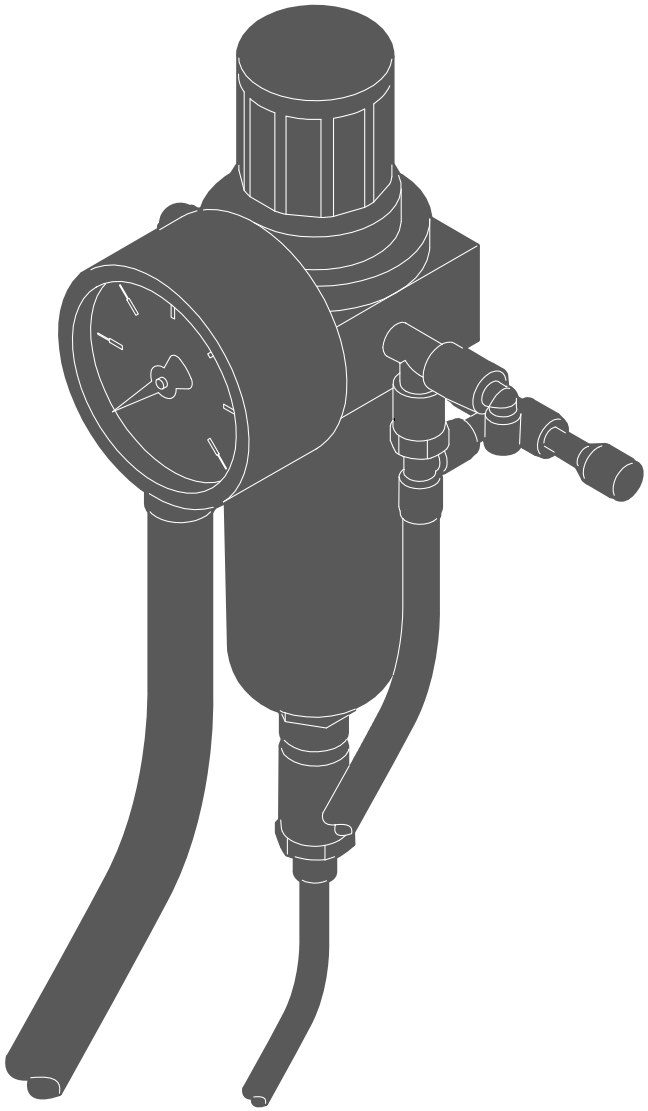

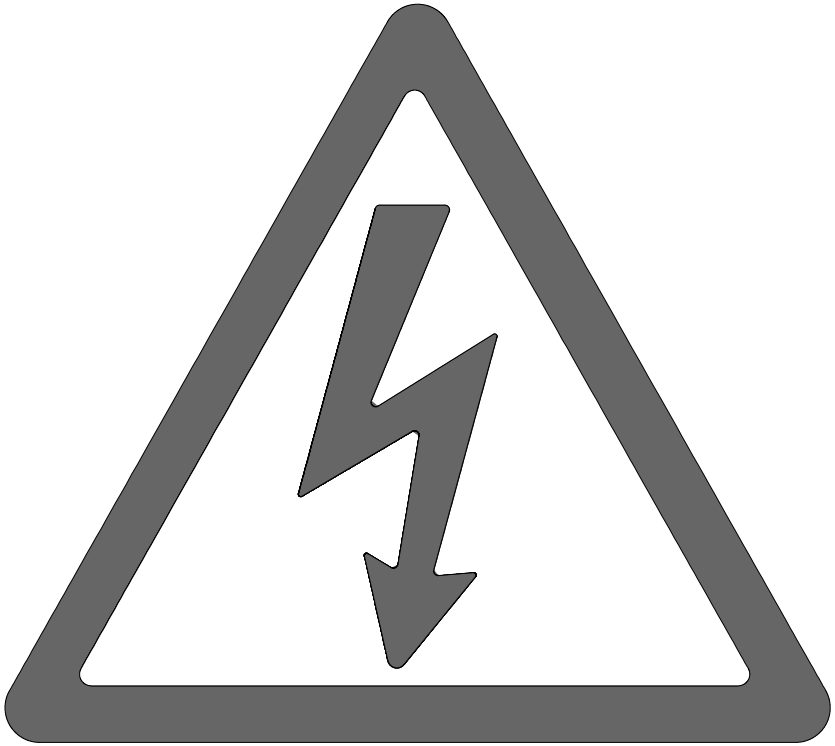

R 36

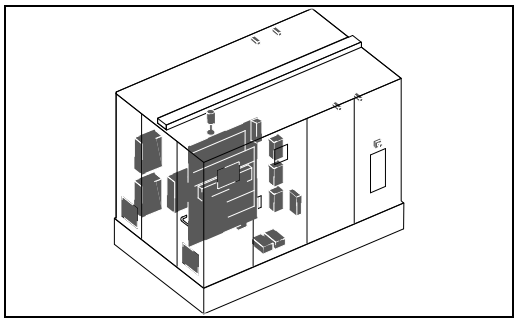

820

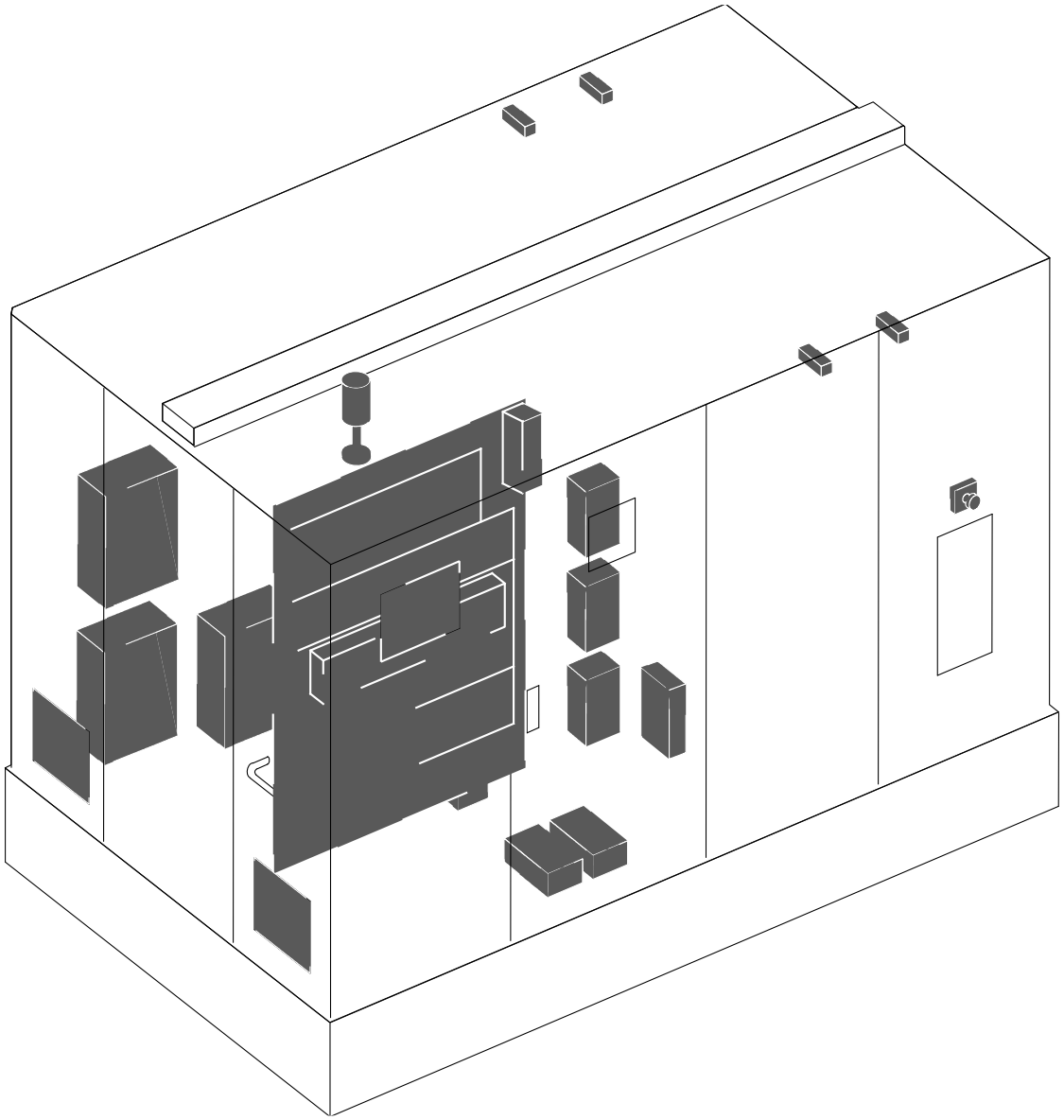

Navi_8_20_01.cgm

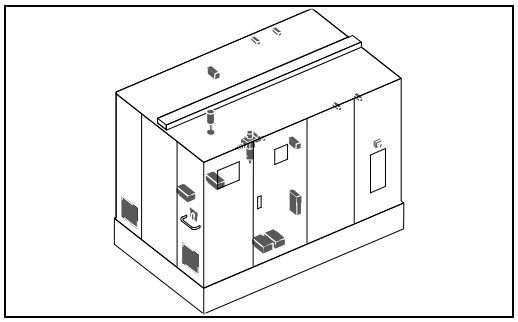

82010

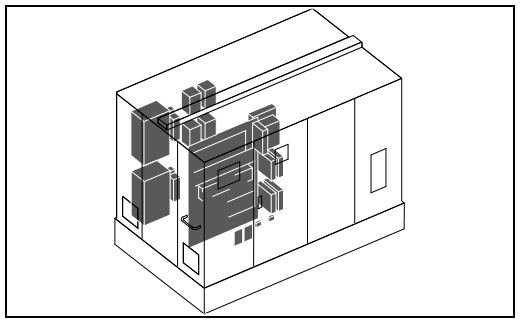

82020

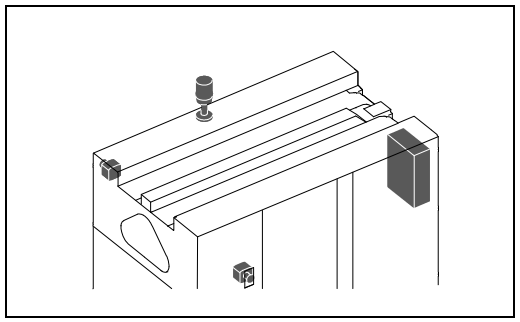

82040

R 36

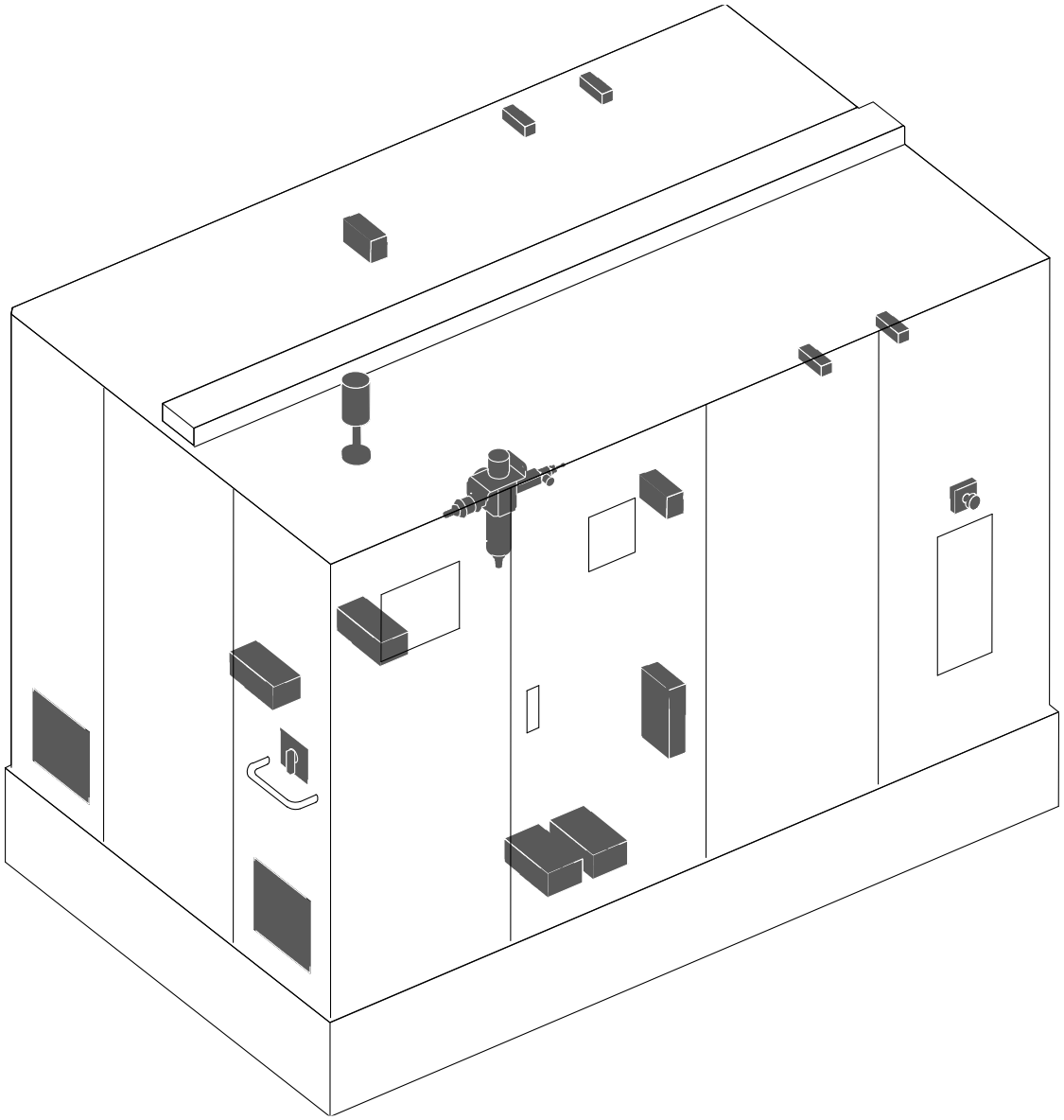

82010

Navi_8_20_10_01.cgm

R 36

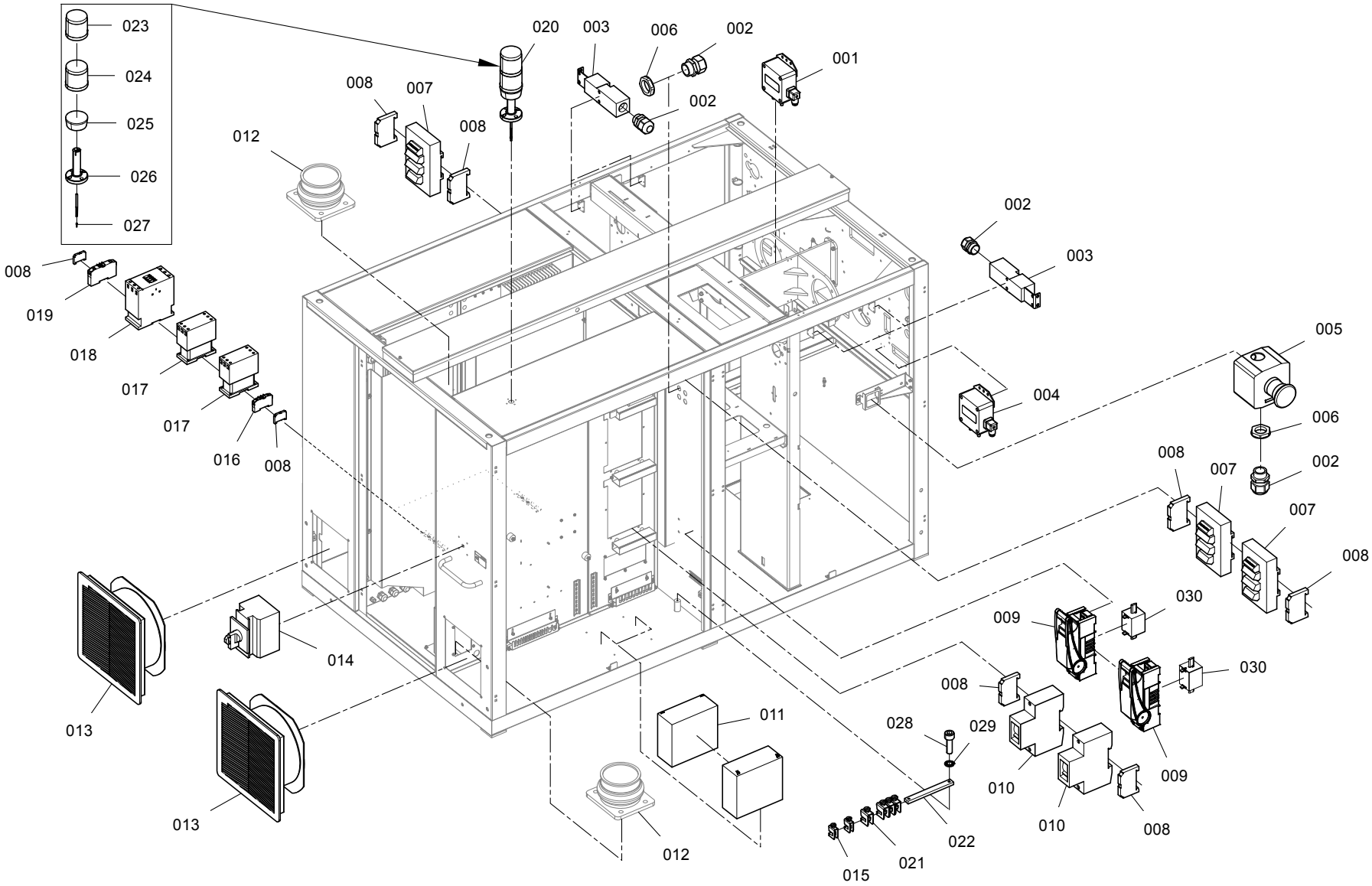

82010

RXX_8_20_10_A102.cgm

Catalogue no. Katalog-Nr.	Part No. Material-Nr.	Part description en	Material-Bezeichnung de	Comment Bemerkung
82010.001	U47800010	Sensor CRESSTO TMG418N4H	Sensor CRESSTO TMG418N4H	
82010.003	10107830	Safety limit switch AgNi 1s1oe 10N	Sicherheitsendschalter AgNi 1s1oe 10N	
82010.004	10735019	Sensor CRESSTO TMG318N4HB	Sensor CRESSTO TMG318N4HB	
82010.005	10413624	Mushroom pushbutton	Schlagtaster	
82010.007	10722853	Transfer module 8 Fdz/Fdz	?bergabemodul 8 Fdz/Fdz	
82010.008	10140334	End adjuster 4mm2 GY	Endsteller 4mm2 GY	
82010.009	11002679	Fuse holder XLP1-1P	Sicherungshalter XLP1-1P	
82010.011	11016062	Accumulator DC12V 22Ah	Akkumulator DC12V 22Ah	
82010.012	U82779969	Cable bushing PK69T	Kabelt?lle PK69T	
82010.013	10940778	Ventilator SG600,400	L?fter SG600,400	
82010.014	10765742	Load switch assembly 110kW 315A 3p	Lastschalter Einbau 110kW 315A 3p	
82010.015	10584147	Connection terminal 4...35mm2 10mm	Anschlussklemme 4...35mm2 10mm	
82010.016	10425507	Protective conductor terminal 16mm2 GNYE	Schutzleiterklemme 16mm2 GNYE 1 1/1	
82010.017	10972314	Contactor 18,5kW AC/DC20...33V 1NO/1NC S	Sch?tz 18,5kW AC/DC20...33V 1NO/1NC S	
82010.017	10972358	Contactor 37kW AC/DC20...33V 1NO/1NC S2	Sch?tz 37kW AC/DC20...33V 1NO/1NC S2	
82010.019	10761800	Protective conductor terminal 35mm2 GNYE	Schutzleiterklemme 35mm2 GNYE 1 1/1	
82010.020	10939950	Signal lamp HL1 - R35 V2	Signallampe HL1 - R35 V2	
82010.021	10964065	Connection terminal 16...120mm2 10mm	Anschlussklemme 16...120mm2 10mm	
82010.022	10964533	Profile CU 20x10-180	Profil CU 20x10-180	
82010.023	10939814	Indicator lamp YE AC/DC24V LED	Meldelampe YE AC/DC24V LED	
82010.024	10662877	Indicator lamp red AC/DC24V	Meldelampe rot AC/DC24V	
82010.025	10662872	Indicator lamp bottom	Meldelampe Boden	
82010.026	10661484	Assembly platform pipe d70	Montageplatte Rohr d70	
82010.027	10753553	End sleeve 0,75mm2 1.2x8 GY	Endh?lse 0,75mm2 1.2x8 GY	
82010.028	10259461	Cyl.screw M6x20	Zyl.Schraube M6x20	
82010.029	10258859	Locking washer 6.4/10	Sicherungsscheibe 6.4/10	
82010.030	10964032	Fuse NH1 200A 690V gR	Sicherung NH1 200A 690V gR	

R 36

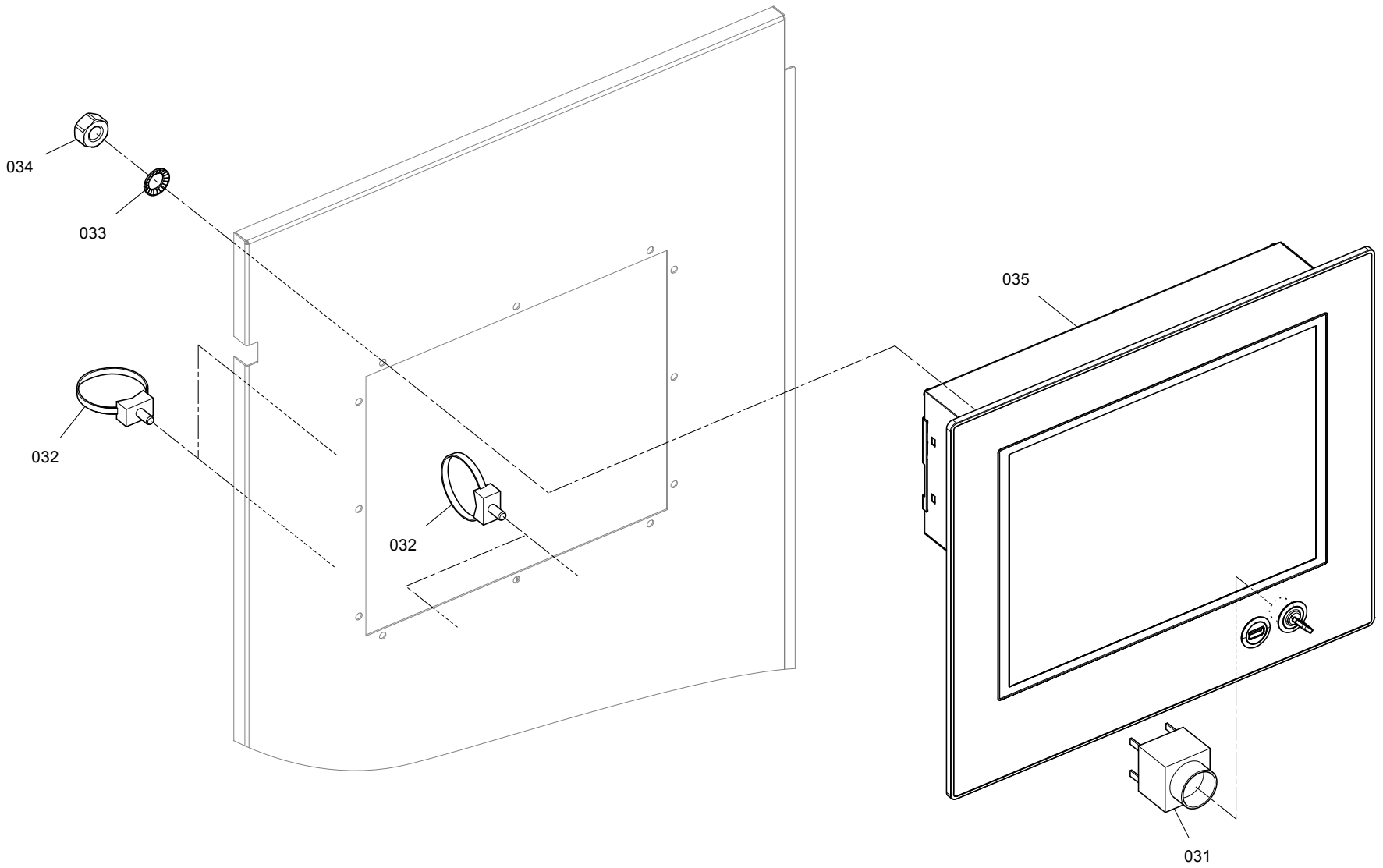

82010

RXX_8_20_10_201.cgm

Catalogue no. Katalog-Nr.	Part No. Material-Nr.	Part description en	Material-Bezeichnung de	Comment Bemerkung
82010.031	10766725	Contact 1NC1NO Dm16	Kontakt 1NC1NO Dm16	
82010.032	10488934	Cable binder 175x4,7 220N NA	Kabelbinder 175x4,7 220N NA	
82010.033	10258859	Locking washer 6.4/10	Sicherungsscheibe 6.4/10	
82010.034	10431759	Hexagon nut M6-8	6kt-Mutter M6-8	
82010.035	10788508	Panel PP520 15' QNX	Panel PP520 15' QNX	

R 36

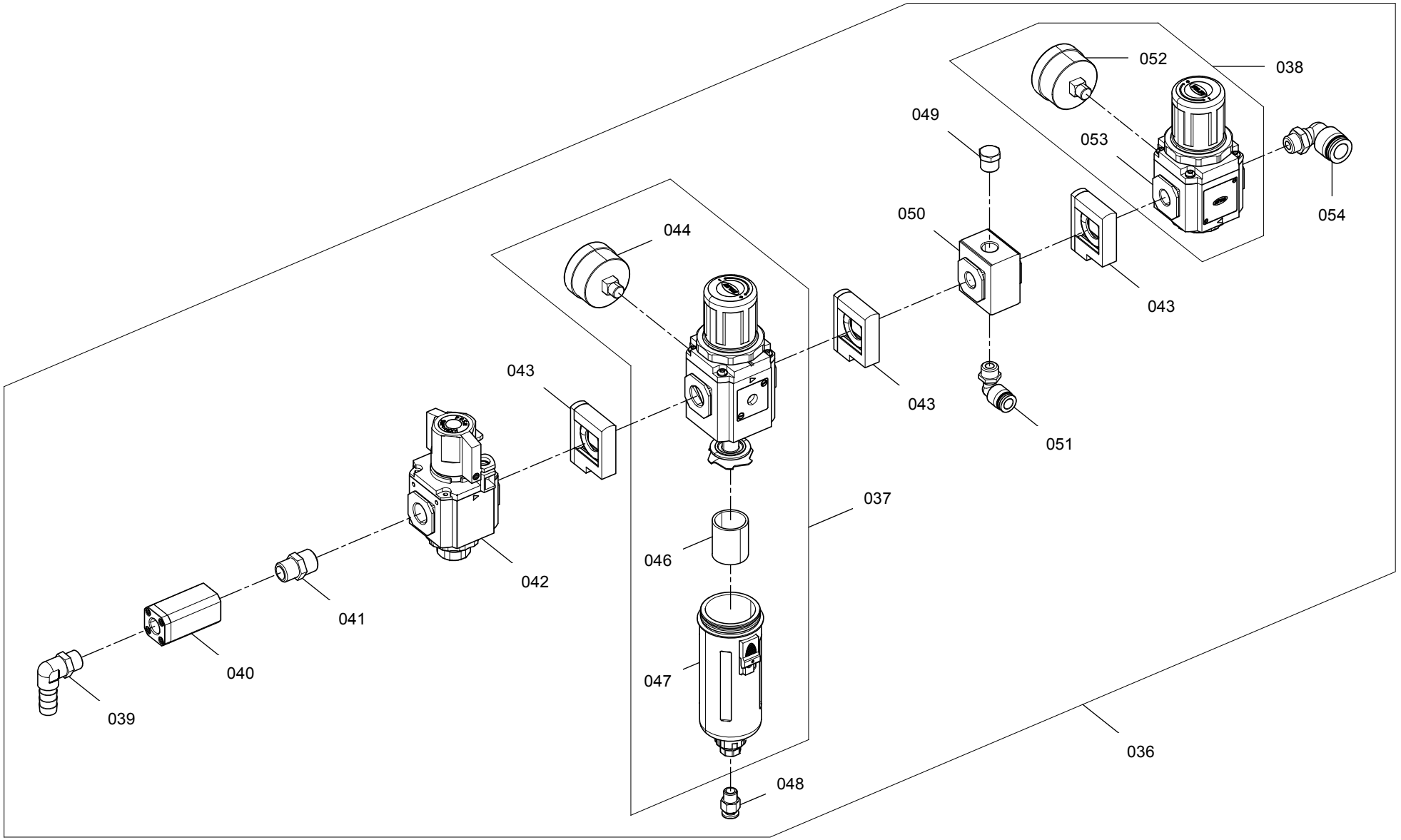

82010

RXX_8_20_10_301.cgm

Catalogue no. Katalog-Nr.	Part No. Material-Nr.	Part description en	Material-Bezeichnung de	Comment Bemerkung
82010.036	10970606	Compressed air station R35 V2	Druckluftstation R35 V2	
82010.037	10837422	Air filter GFR300-10-A-C1	Bel?ftungsfilter GFR300-10-A-C1	
82010.038	10932221	Pressure regulating valve GR300-08-L-J-C	Druckregelventil GR300-08-L-J-C1	
82010.039	10970845	Hose connection L12-1/4	Schlauchanschluss L12-1/4	
82010.040	10829078	Check valve NRV08	R?ckschlagventil NRV08	
82010.041	10837399	Pipe double nipple ABB02-03	Rohrdoppelnippel ABB02-03	
82010.042	10970650	Safety valve ON - OFF GZ300-10-P	Sicherheitsventil ON - OFF GZ300-10-P	
82010.043	10970629	Bracket connector GA300U-P1	Tr?ger Verbinder GA300U-P1	
82010.044	10847539	Pressure meter GS-40	Druckmessger?t GS-40	
82010.046	10847591	Filter 40um	Filter 40um	
82010.047	10847540	Bowl GFR300	Schale GFR300	
82010.048	10837518	Connector APC6-01	Verbinder APC6-01	
82010.049	10971005	Thread plug BZ02	Gewindestopfen BZ02	
82010.050	10970651	Distributor block GA300U-08	Verteilblock GA300U-08	
82010.051	10971008	Tube connector APL8-02	Schlauchverbinder APL8-02	
82010.052	10932241	Pressure meter GS-40 L-M	Druckmessger?t GS-40 L-M	
82010.053	10932222	Base body FOR GR300	Grundk?rper FOR GR300	
82010.054	10981961	Tube connector AP L12-02	Schlauchverbinder AP L12-02	

R 36

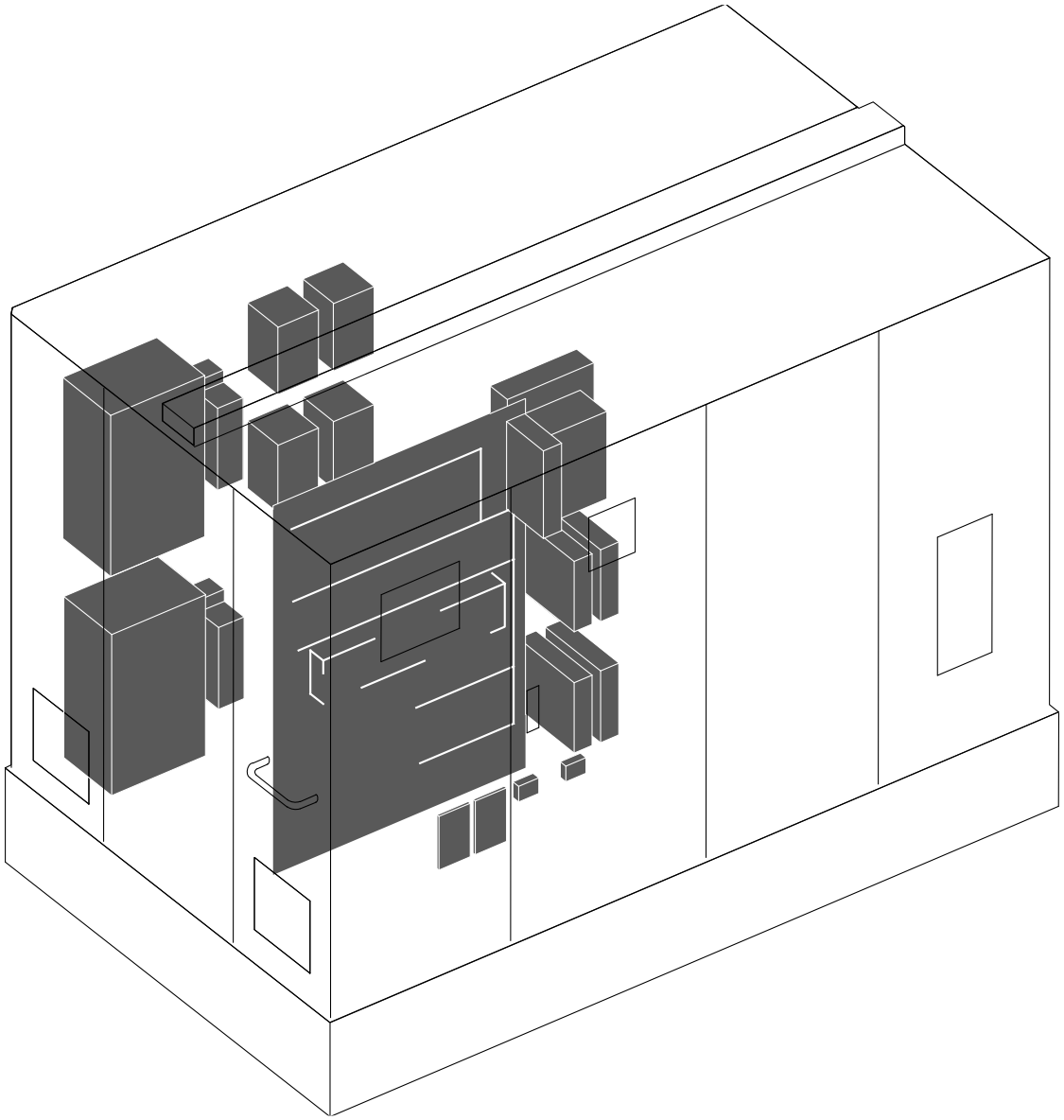

82020

Navi_8_20_20_01.cgm

R 36

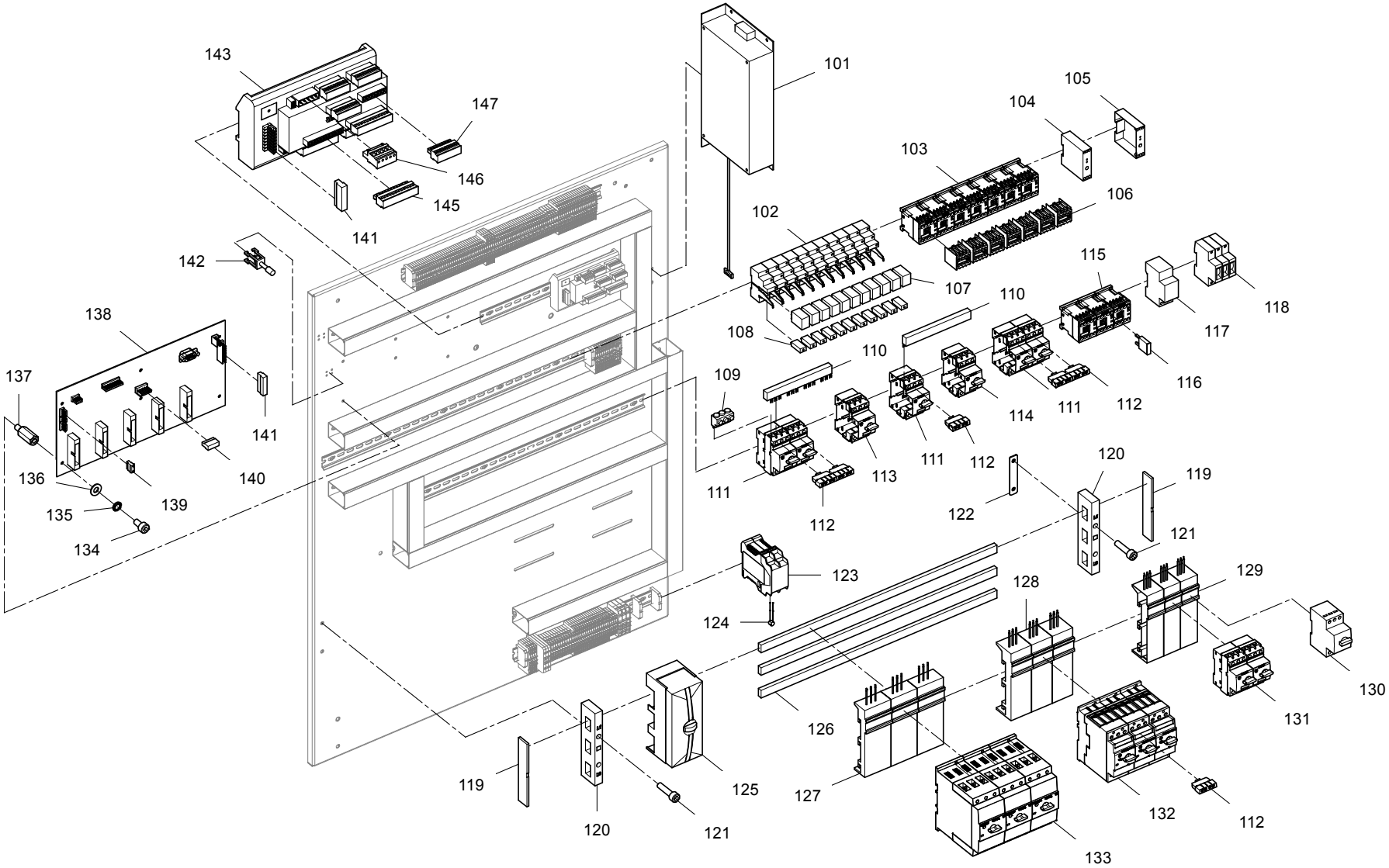

82020

RXX_8_20_20_A301.cgm

Catalogue no. Katalog-Nr.	Part No. Material-Nr.	Part description en	Material-Bezeichnung de	Comment Bemerkung
82020.101	10977199	Power filter 3pE480V 30A 50/60Hz	Netzfilter 3pE480V 30A 50/60Hz	
82020.102	10037122	Socket 14p 4Uk	Stecksockel 14p 4Uk	
82020.103	10782299	Contactor relay 3NO/1NC DC24V	Hilfssch?tz 3NO/1NC DC24V	
82020.104	10722524	Timing relay ein-v AC24-240V 0.3-30MIN	Zeitrelais ein-v AC24-240V 0.3-30MIN	
82020.105	10722523	Timing relay aus-v AC24-240V 0.1-10s	Zeitrelais aus-v AC24-240V 0.1-10s	
82020.106	10970088	Contact block 1NC/3NO S00	Kontaktblock 1NC/3NO S00	
82020.107	10582659	Relay Au 4Uk 1f IP67 DC24V	Relais Au 4Uk 1f IP67 DC24V	
82020.108	10370350	Diode module DC6-24V 1N4007 1A/1000V +A1	Diodenmodul DC6-24V 1N4007 1A/1000V +A1	
82020.109	10487678	Connecting block top 3Ph S0	Anschlussblock oben 3Ph S0	
82020.110	10139751	Busbar block 4x3Ph T45mm S00,S0	Schienenblock 4x3Ph T45mm S00,S0	
82020.111	10946343	Motor protection switch 1,8-2,5A 100kA S	Motorschutzschalter 1,8-2,5A 100kA S0	
82020.112	10945560	Contact block TA 1NO/1NC S00, S0	Kontaktblock TA 1NO/1NC S00, S0	
82020.113	10946329	Motor protection switch 1,1-1,6A 100kA S	Motorschutzschalter 1,1-1,6A 100kA S0	
82020.114	10915913	Motor protection switch 4.5-6.3A 100kA S	Motorschutzschalter 4.5-6.3A 100kA S0	
82020.115	10970068	Contactor 4kW DC24V 1NC S00	Sch?tz 4kW DC24V 1NC S00	
82020.116	10779186	Varistor module DC24 S00	Varistor Modul DC24 S00	
82020.117	10736111	Operating hours counter DC24V 00000,00h	Betriebsstundenz?hler DC24V 00000,00h	
82020.118	10579201	Automatic cut-out 1p 6A 230/415AC B15kA	Sicherungsautomat 1p 6A 230/415AC B15kA	
82020.119	10609766	Cover 3p 60mm 5/10x12...30mm	Abdeckung 3p 60mm 5/10x12...30mm	
82020.120	10609765	Bus bar fastener 3p 60mm 5/10x12...30mm	Sammelschienenhalter 3p 60mm 5/10x12...3	
82020.121	10487447	Cyl.screw M6x25	Zyl.Schraube M6x25	
82020.122	10580759	Retaining strip welded V3	Halteleiste geschweisst V3	
82020.123	10750877	Module BIZON	Modul BIZON	
82020.124	10790134	Temperature sensor 2020 Ohm 1mA	Temperaturf?hler 2020 Ohm 1mA	
82020.125	10609767	Connecting block 3p 60mm 25...120mm2	Anschlussblock 3p 60mm 25...120mm2	
82020.126	10970219	Profile CU 20x10-585	Profil CU 20x10-585	
82020.127	10205209	Busbar system 60mm 100A	Sammelschienensystem 60mm 100A	
82020.128	10205208	Busbar system 60mm 56A	Sammelschienensystem 60mm 56A	
82020.129	10205207	Busbar system 60mm 25A	Sammelschienensystem 60mm 25A	

R 36

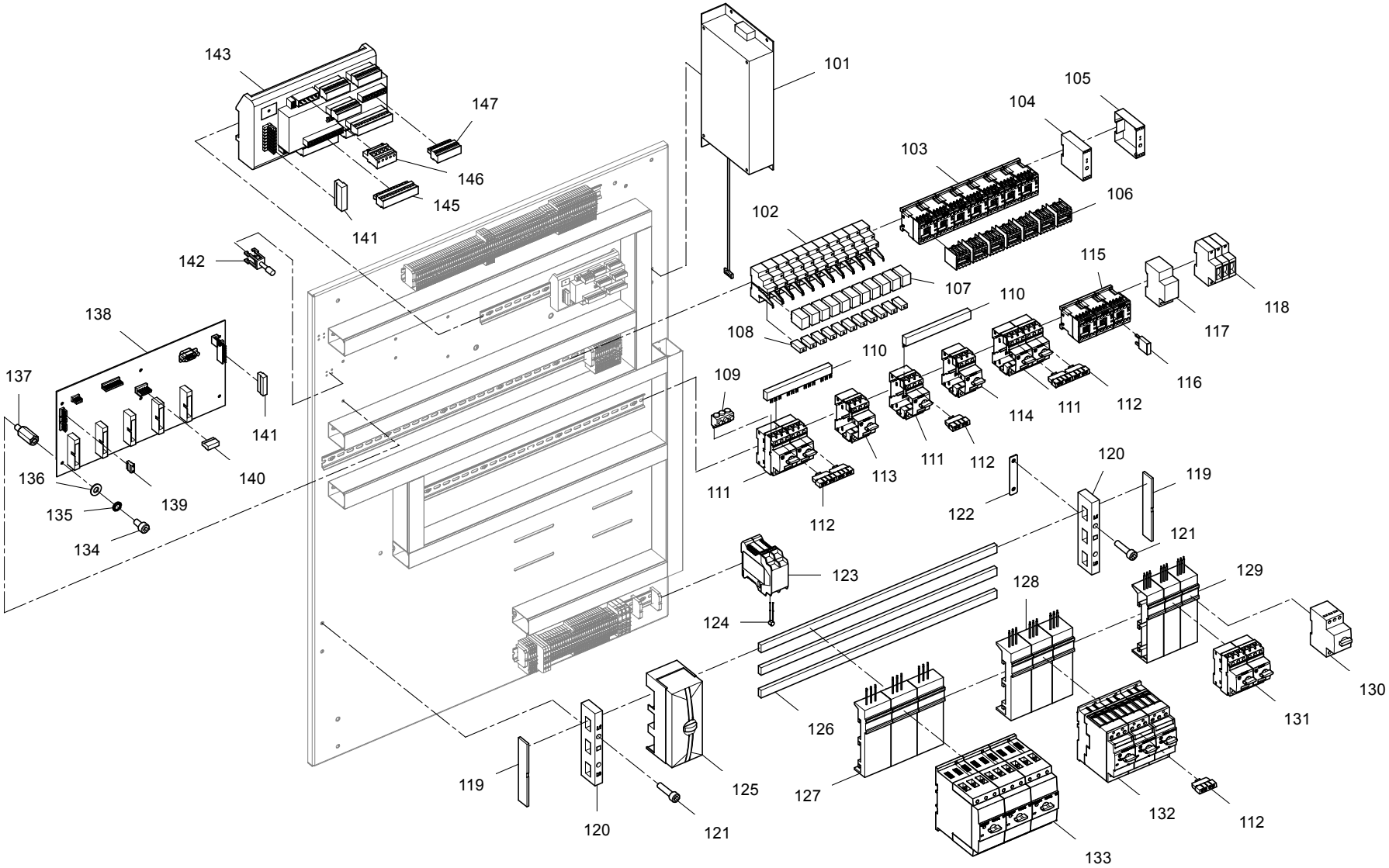

82020

RXX_8_20_20_A301.cgm

Catalogue no. Katalog-Nr.	Part No. Material-Nr.	Part description en	Material-Bezeichnung de	Comment Bemerkung
82020.131	10906267	Motor protection switch 18-25A 55kA S0	Motorschutzschalter 18-25A 55kA S0	
82020.132	10968513	Motor protection switch 22.0...32.0A 65k	Motorschutzschalter 22.0...32.0A 65kA S2	
82020.132	10968518	Motor protection switch 28.0...36.0A 65k	Motorschutzschalter 28.0...36.0A 65kA S2	
82020.133	10440428	Motor protection switch 80-100A 50kA S3	Motorschutzschalter 80-100A 50kA S3	
82020.134	10258900	Cyl.screw M4x8	Zyl.Schraube M4x8	
82020.135	10483109	Locking washer 4.3/7	Sicherungsscheibe 4.3/7	
82020.136	10455616	Washer 4.3-St-200HV	Scheibe 4.3-St-200HV	
82020.137	10734270	Spacer BN 3318 - M4x16	Abstandhalter BN 3318 - M4x16	
82020.138	10320586	Section electronics SC 05	Sektionselektronik SC 05	
82020.139	10741114	Socket terminal strip 2.54 5p 24 E	Buchsenleiste 2.54 5p 24 E	
82020.140	10741115	Socket terminal strip 3.96 5p 18 T	Buchsenleiste 3.96 5p 18 T	
82020.141	10741118	Socket terminal strip 3.96 8p 22 T	Buchsenleiste 3.96 8p 22 T	
82020.142	10480292	Shielding clamp Dm8mm	Schirmklemme Dm8mm	
82020.143	10699289	Blend module XIO-102 CO	Mischmodul XIO-102 CO	
82020.145	10453906	Plug in bar R3,81 12p 0,14-1,5(AWG28-16)	Steckleiste R3,81 12p 0,14-1,5(AWG28-16)	
82020.146	10461542	Plug in bar R5,08 Sr 5p 12A250V	Steckleiste R5,08 Sr 5p 12A250V	
82020.147	10453903	Plug in bar R3,81 8p 0,14-1,5(AWG28-16)	Steckleiste R3,81 8p 0,14-1,5(AWG28-16)	

R 36

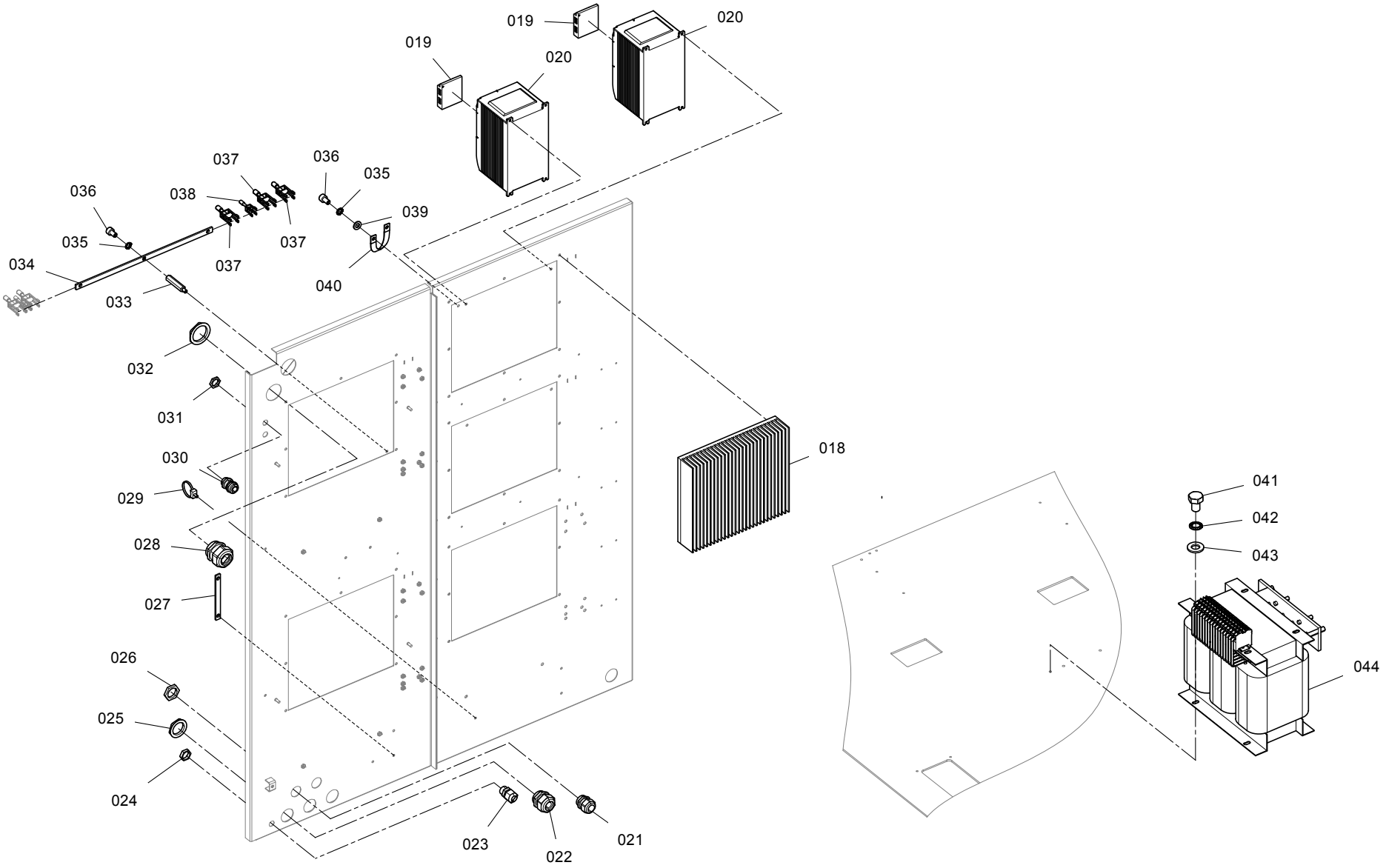

82020

RXX_8_20_20_B201.cgm

Catalogue no. Katalog-Nr.	Part No. Material-Nr.	Part description en	Material-Bezeichnung de	Comment Bemerkung
82020.018	11017175	Cooler 2x7.5, 30, 37, 55kW	K?hlk?rper 2x7.5, 30, 37, 55kW	
82020.019	10688736	Interface T1000V CANopen/Terminal	Interface T1000V CANopen/Terminal	
82020.020	11006201	Frequency converter 5.5/7.5kW + SW-SDD	Frequenzumrichter 5.5/7.5kW + SW-SDD	
82020.021	10705003	Cable gland M32x1,5 - HSK-EX	Kabelverschraubung M32x1,5 - HSK-EX	
82020.023	U41610016	Cable gland SKINTOP ST-M16x1,5	Kabelverschraubung SKINTOP ST-M16x1,5	
82020.024	U41601615	Nut piece GMP/GL M16x1,5	Mutterst?ck GMP/GL M16x1,5	
82020.026	U41603215	Nut piece GMP/GL M32x1,5	Mutterst?ck GMP/GL M32x1,5	
82020.027	10970855	Ground strap - CB II	Masseband - CB II	
82020.028	10800238	Cable gland SKINTOP ST-M50x1,5	Kabelverschraubung SKINTOP ST-M50x1,5	
82020.029	10488934	Cable binder 175x4,7 220N NA	Kabelbinder 175x4,7 220N NA	
82020.030	U41600017	Cable gland MS-SC-M16x1,5	Kabelverschraubung MS-SC-M16x1,5	
82020.031	U41601616	Nut SKINDICHT SM-PE M16x1,5	Mutter SKINDICHT SM-PE M16x1,5	
82020.032	10800275	Nut GMP/GL M50x1,5	Mutter GMP/GL M50x1,5	
82020.033	10532398	Distance piece M6x45	Distanzhalter M6x45	
82020.034	10927210	Ground strap - CB	Masseband - CB	
82020.035	10258859	Locking washer 6.4/10	Sicherungsscheibe 6.4/10	
82020.036	10258830	Cyl.screw M6x10	Zyl.Schraube M6x10	
82020.037	U48822716	Shielding clamp 16mm - Wago 790-116	Schirmklemme 16mm - Wago 790-116	
82020.038	10480292	Shielding clamp Dm8mm	Schirmklemme Dm8mm	
82020.039	10456142	Washer 6.4-St-200HV	Scheibe 6.4-St-200HV	
82020.040	10736264	Sliver conductor flexible 16-150/020/09	Bandleiter flexibel 16-150/020/09	
82020.041	10259083	Hex. screw M8x12	6kt-Schraube M8x12	
82020.042	10461551	Locking washer 8.4/13	Sicherungsscheibe 8.4/13	
82020.043	10478061	Washer 8.4-St-200HV	Scheibe 8.4-St-200HV	
82020.044	10938904	Transformer 460-380/3x20V, 12 kVA	Transformator 460-380/3x20V, 12 kVA	

R 36

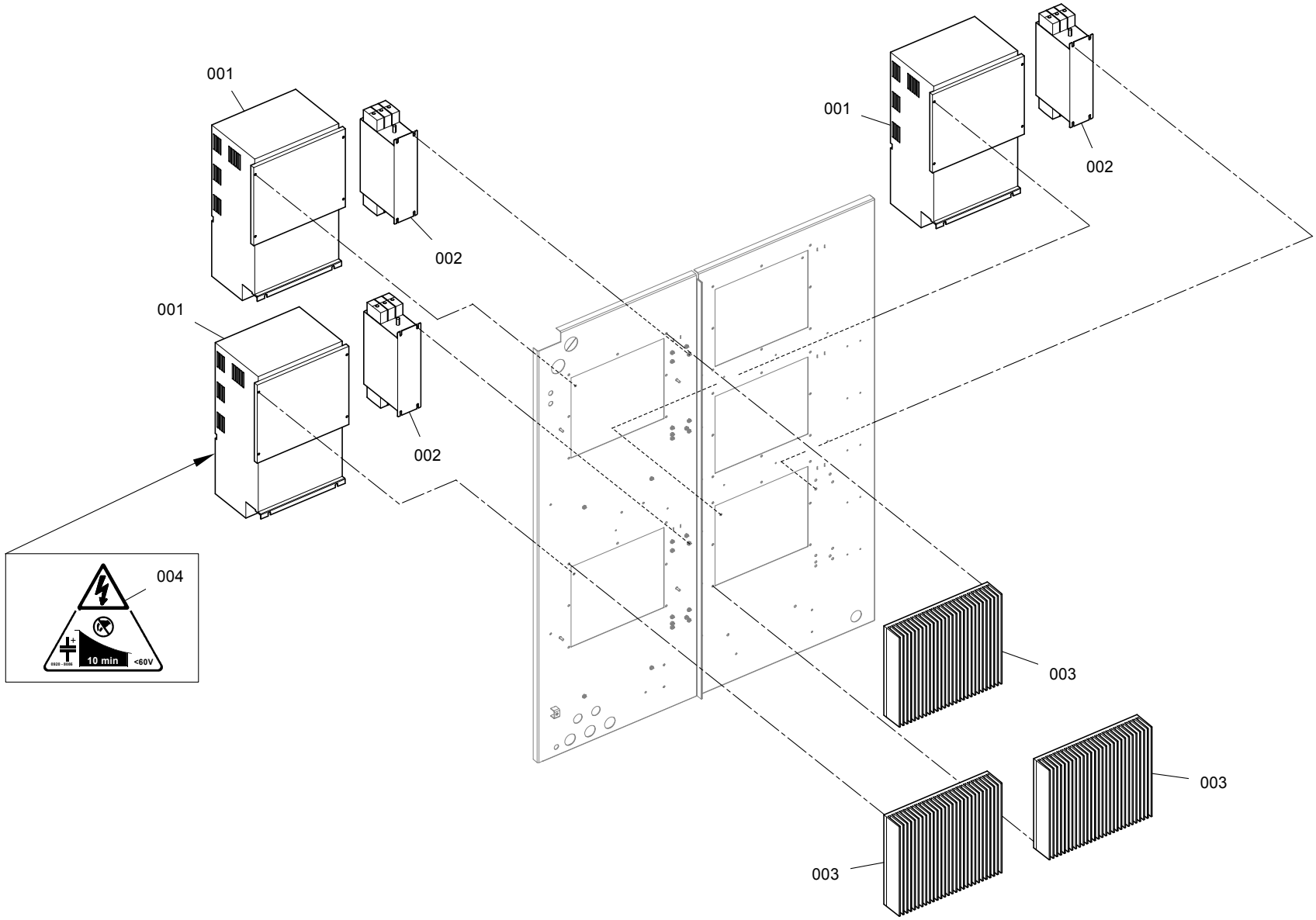

82020

RXX_8_20_20_101.cgm

58361

Catalogue no. Katalog-Nr.	Part No. Material-Nr.	Part description en	Material-Bezeichnung de	Comment Bemerkung
82020.001	11006186	Frequency converter 30.0/37.0kW + SW	Frequenzumrichter 30.0/37.0kW + SW	
82020.002	10683828	Power filter 3pE480V 100A 50-60Hz	Netzfilter 3pE480V 100A 50-60Hz	
82020.003	11017175	Cooler 2x7.5, 30, 37, 55kW	K?hlk?rper 2x7.5, 30, 37, 55kW	
82020.004	10356219	Warning sign 50	Warnschild 50	

R 36

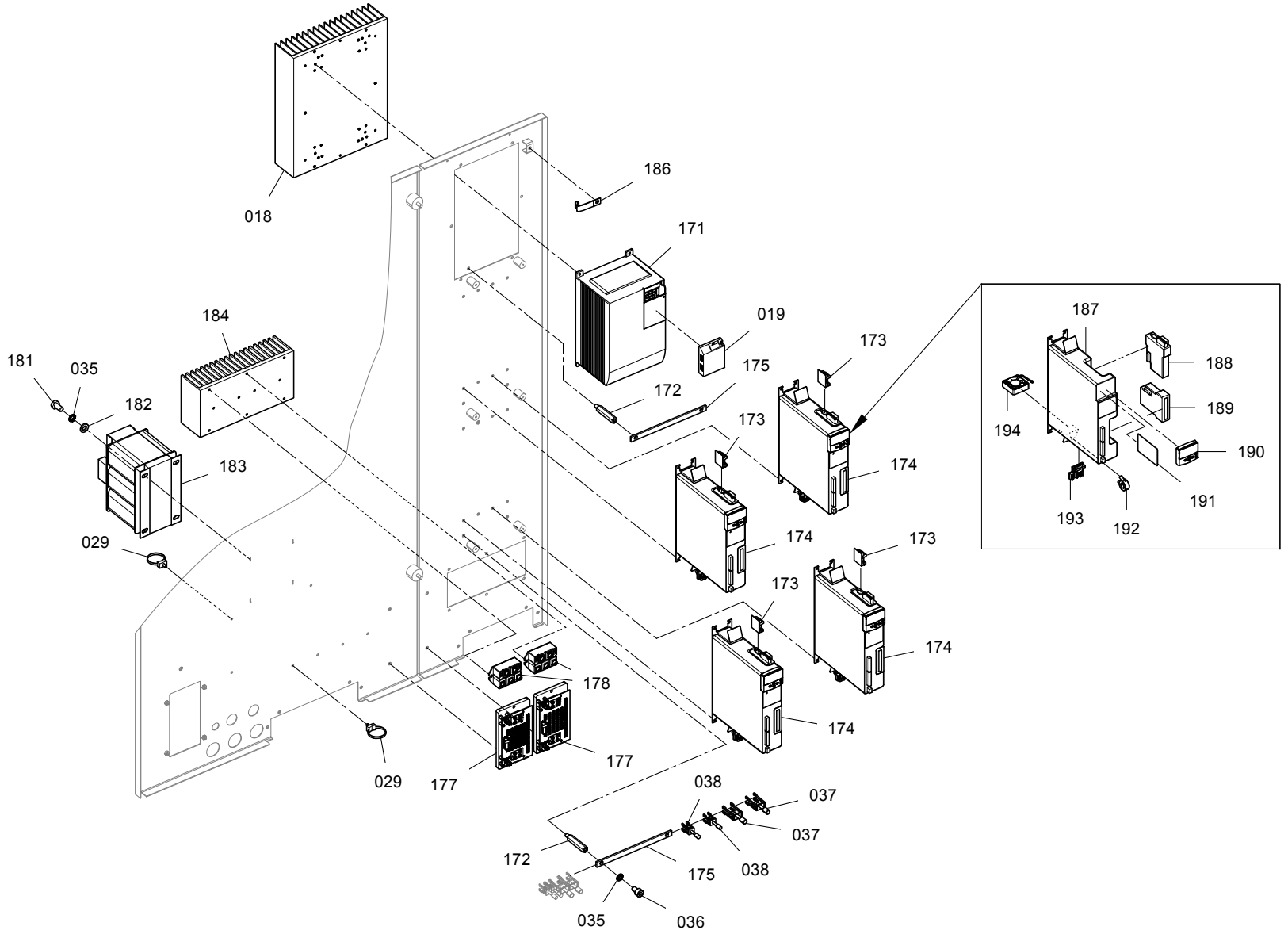

82020

RXX_8_20_20_401.cgm

Catalogue no. Katalog-Nr.	Part No. Material-Nr.	Part description en	Material-Bezeichnung de	Comment Bemerkung
82020.018	10664765	Air cooler single 5,5-18,5kW mod	Luftk?hler einfach 5,5-18,5kW mod	
82020.019	10688736	Interface T1000V CANopen/Terminal	Interface T1000V CANopen/Terminal	
82020.035	10258859	Locking washer 6.4/10	Sicherungsscheibe 6.4/10	
82020.036	10258830	Cyl.screw M6x10	Zyl.Schraube M6x10	
82020.171	11006190	Frequency converter 7.5/11.0kW + SW	Frequenzumrichter 7.5/11.0kW + SW	
82020.172	10532398	Distance piece M6x45	Distanzhalter M6x45	
82020.173	10942095	Printed circuit board D CAN v 3.0-G	Leiterplatte D CAN v 3.0-G	
82020.174	10755254	Frequency converter complete CT DST 1402	Frequenzumrichter komplett CT DST 1402	
82020.175	10722563	Ground strap - EB	Masseband - EB	
82020.177	10964225	Module PWR 200A	Modul PWR 200A	
82020.178	10263117	Rectifier PSD 192/14	Gleichrichter PSD 192/14	
82020.184	10734139	Air cooler complete	Luftk?hler komplett	
82020.186	10736237	Sliver conductor flexible 16-100/020/09	Bandleiter flexibel 16-100/020/09	
82020.187	10755168	Frequency converter CT DST 1402+/SW	Frequenzumrichter CT DST 1402+/SW	
82020.188	10755255	Module SM-CANopen	Modul SM-CANopen	
82020.189	10755306	Module SM-Resolver	Modul SM-Resolver	
82020.190	10755089	Led display - EMERSON DST	LED-Anzeige - EMERSON DST	
82020.191	11000778	Digital C A R D 64kB	Digital C A R D 64kB	
82020.192	10755315	Toroidal core VT025U, d=25/12mm	Ringkern VT025U, d=25/12mm	
82020.193	10755362	Reduction UT02 15V	Reduktion UT02 15V	
82020.194	10985235	Ventilator DST	L?fter DST	

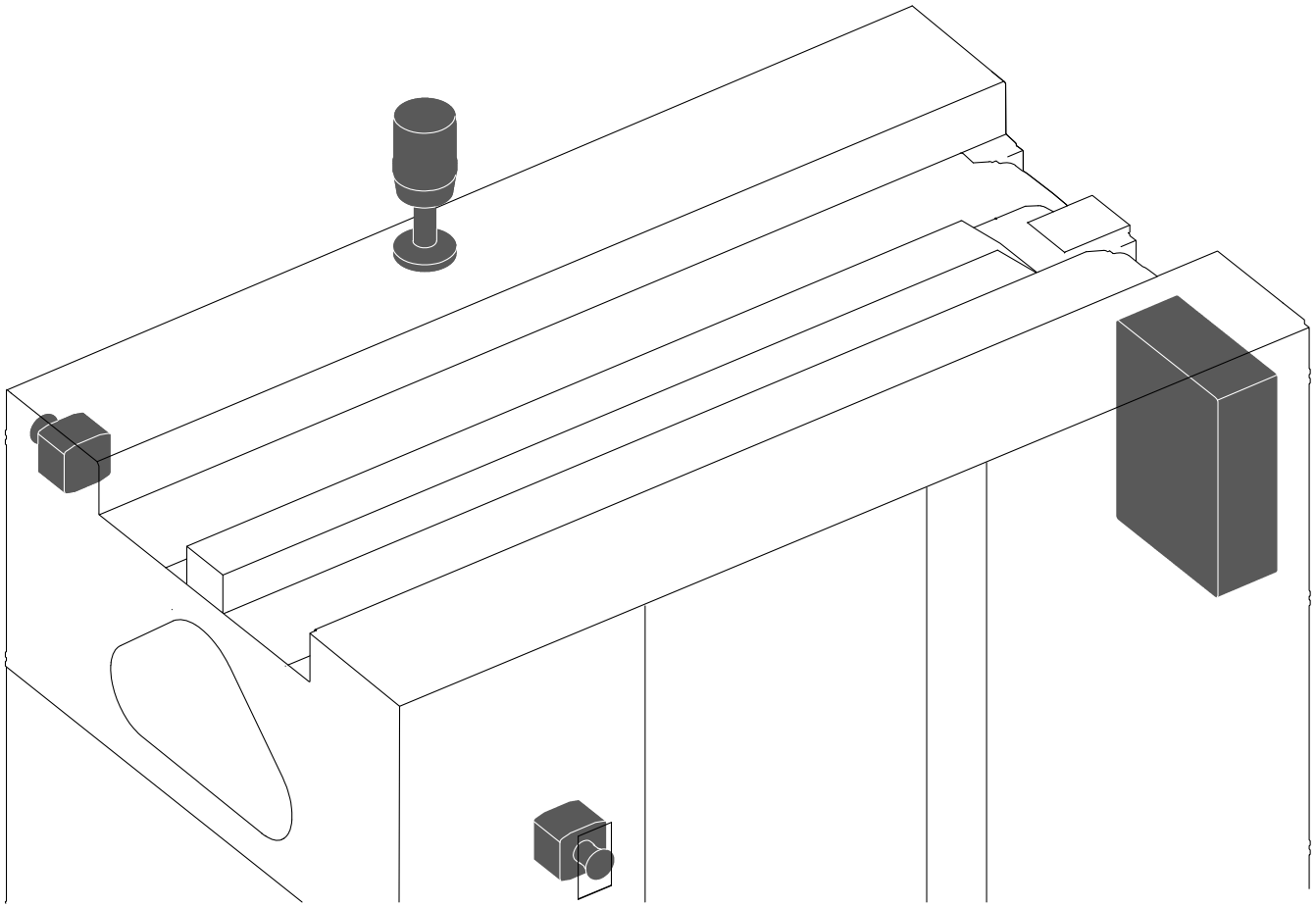

R 36

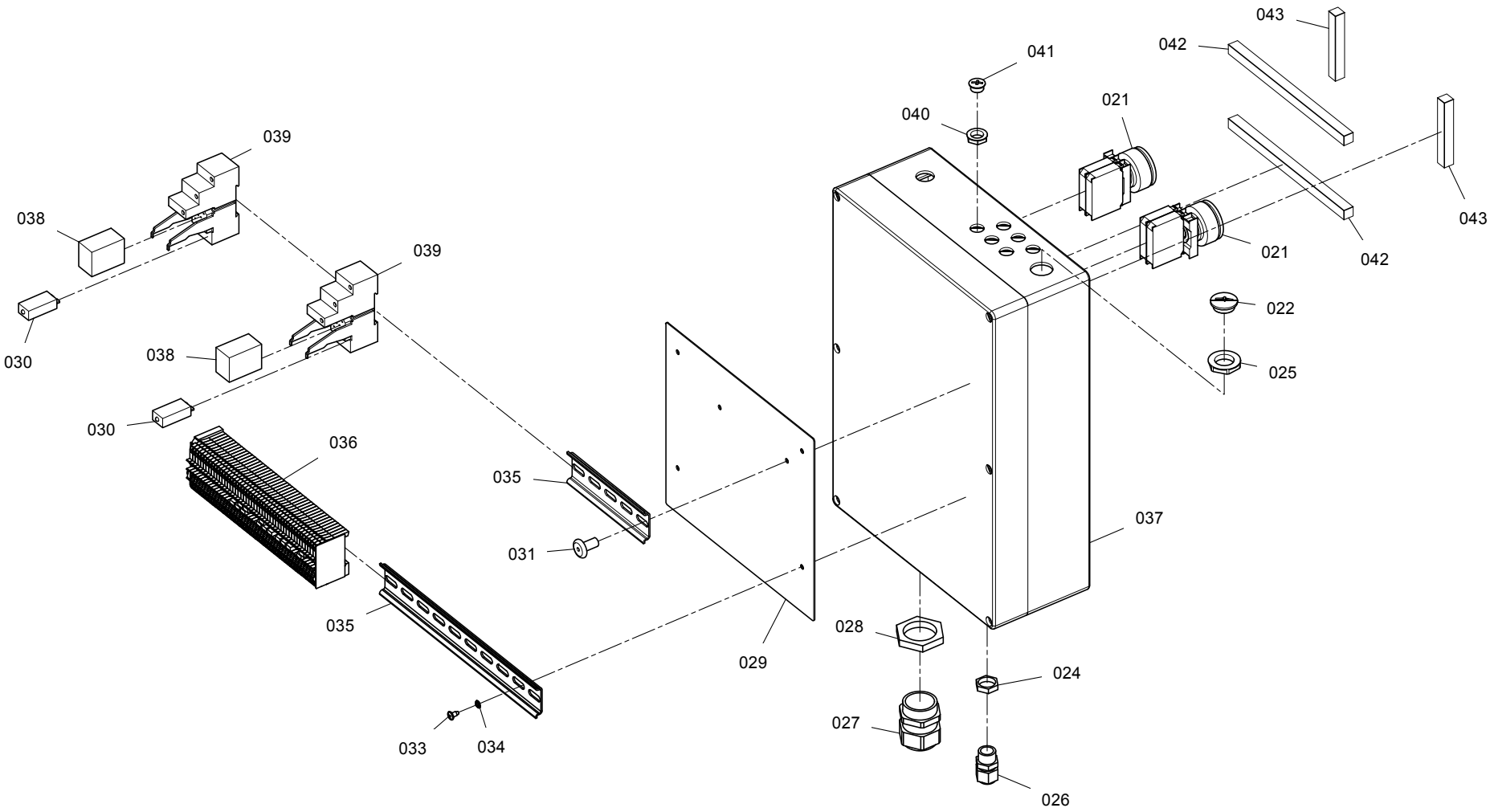

82040

RXX_8_20_40_A202.cgm

Catalogue no. Katalog-Nr.	Part No. Material-Nr.	Part description en	Material-Bezeichnung de	Comment Bemerkung
82040.021	11043469	Push button complete R36	Drucktaster komplett R36	
82040.022	U43772570	Locking plug M20x1,5	Verschlussstopfen M20x1,5	
82040.024	U41601615	Nut piece GMP/GL M16x1,5	Mutterst?ck GMP/GL M16x1,5	
82040.025	U41602015	Nut GMP/GL M20x1,5	Mutter GMP/GL M20x1,5	
82040.026	U41610016	Cable gland SKINTOP ST-M16x1,5	Kabelverschraubung SKINTOP ST-M16x1,5	
82040.027	U41610032	Cable gland SKINTOP ST-M32x1,5	Kabelverschraubung SKINTOP ST-M32x1,5	
82040.028	U41603215	Nut piece GMP/GL M32x1,5	Mutterst?ck GMP/GL M32x1,5	
82040.029	10975936	Sheet El BOX ES R35	Blech El BOX ES R35	
82040.030	10370350	Diode module DC6-24V 1N4007 1A/1000V +A1	Diodenmodul DC6-24V 1N4007 1A/1000V +A1	
82040.031	10633299	Blind rivet 4x8-AIA	Blindniet 4x8-AIA	
82040.033	10478150	Screw for plastic KA40x8-H	PT-Linsenschraube KA40x8-H	
82040.034	10259657	Locking washer 4.3/7	Sicherungsscheibe 4.3/7	
82040.035	U44503507	Strip TS 35x7,5	Leiste TS 35x7,5	
82040.036	10971743	Terminal strip X54 V2	Klemmenleiste X54 V2	
82040.037	11042226	Box ES - R36	Schachtel ES - R36	
82040.038	10582659	Relay Au 4Uk 1f IP67 DC24V	Relais Au 4Uk 1f IP67 DC24V	
82040.039	10037122	Socket 14p 4Uk	Stecksockel 14p 4Uk	
82040.040	U43772607	Nut GMP/GL M12x1,5	Mutter GMP/GL M12x1,5	
82040.041	U43772567	Locking plug M12x1,5	Verschlussstopfen M12x1,5	
82040.042	11042437	Seal ES 1	Dichtung ES 1	
82040.043	11042444	Seal ES 2	Dichtung ES 2	

R 36

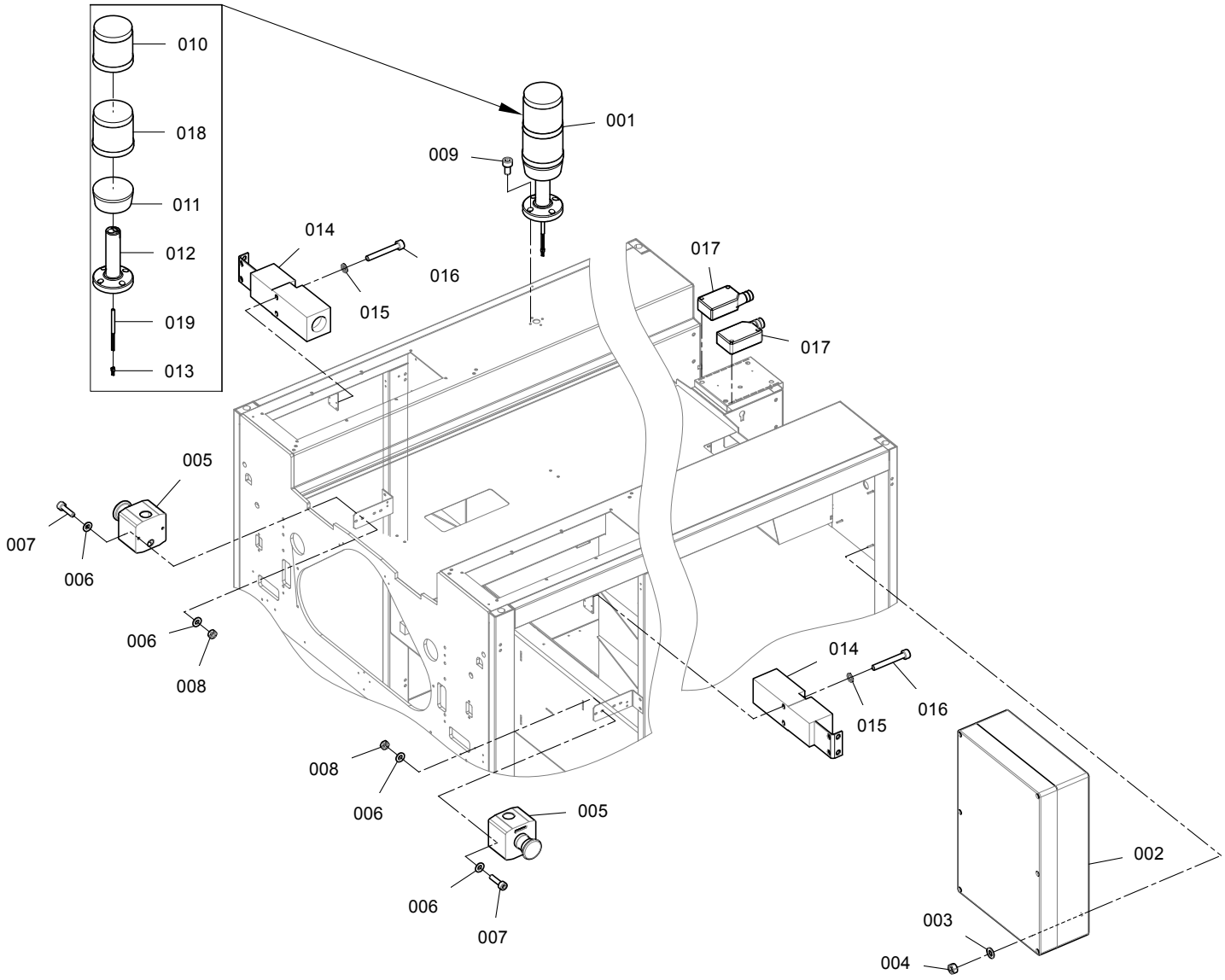

82040

RXX_8_20_40_101.cgm

Catalogue no. Katalog-Nr.	Part No. Material-Nr.	Part description en	Material-Bezeichnung de	Comment Bemerkung
82040.001	10939966	Signal lamp HL51 - R36	Signallampe HL51 - R36	
82040.003	10477709	Washer 5.3-St-200HV	Scheibe 5.3-St-200HV	
82040.004	10259463	Hexagon nut M5-8	6kt-Mutter M5-8	
82040.005	10413624	Mushroom pushbutton	Schlagtaster	
82040.006	10455616	Washer 4.3-St-200HV	Scheibe 4.3-St-200HV	
82040.007	10258903	Cyl.screw M4x16	Zyl.Schraube M4x16	
82040.008	10431758	Hexagon nut M4-8	6kt-Mutter M4-8	
82040.009	10258913	Cyl.screw M5x16	Zyl.Schraube M5x16	
82040.010	10939814	Indicator lamp YE AC/DC24V LED	Meldelampe YE AC/DC24V LED	
82040.011	10662872	Indicator lamp bottom	Meldelampe Boden	
82040.012	10661484	Assembly platform pipe d70	Montageplatte Rohr d70	
82040.013	10753553	End sleeve 0,75mm2 1.2x8 GY	Endh?lse 0,75mm2 1.2x8 GY	
82040.014	10107830	Safety limit switch AgNi 1s1oe 10N	Sicherheitsendschalter AgNi 1s1oe 10N	
82040.015	10483109	Locking washer 4.3/7	Sicherungsscheibe 4.3/7	
82040.016	10258906	Cyl.screw M4x30	Zyl.Schraube M4x30	
82040.017	10985187	Sensor optical GL6-P1111	Sensor optisch GL6-P1111	
82040.018	10662877	Indicator lamp red AC/DC24V	Meldelampe rot AC/DC24V	
82040.019	10740890	Cable RFOVV0 3px0,75 YSL-Y n	Kabel RFOVV0 3px0,75 YSL-Y n	

R 36

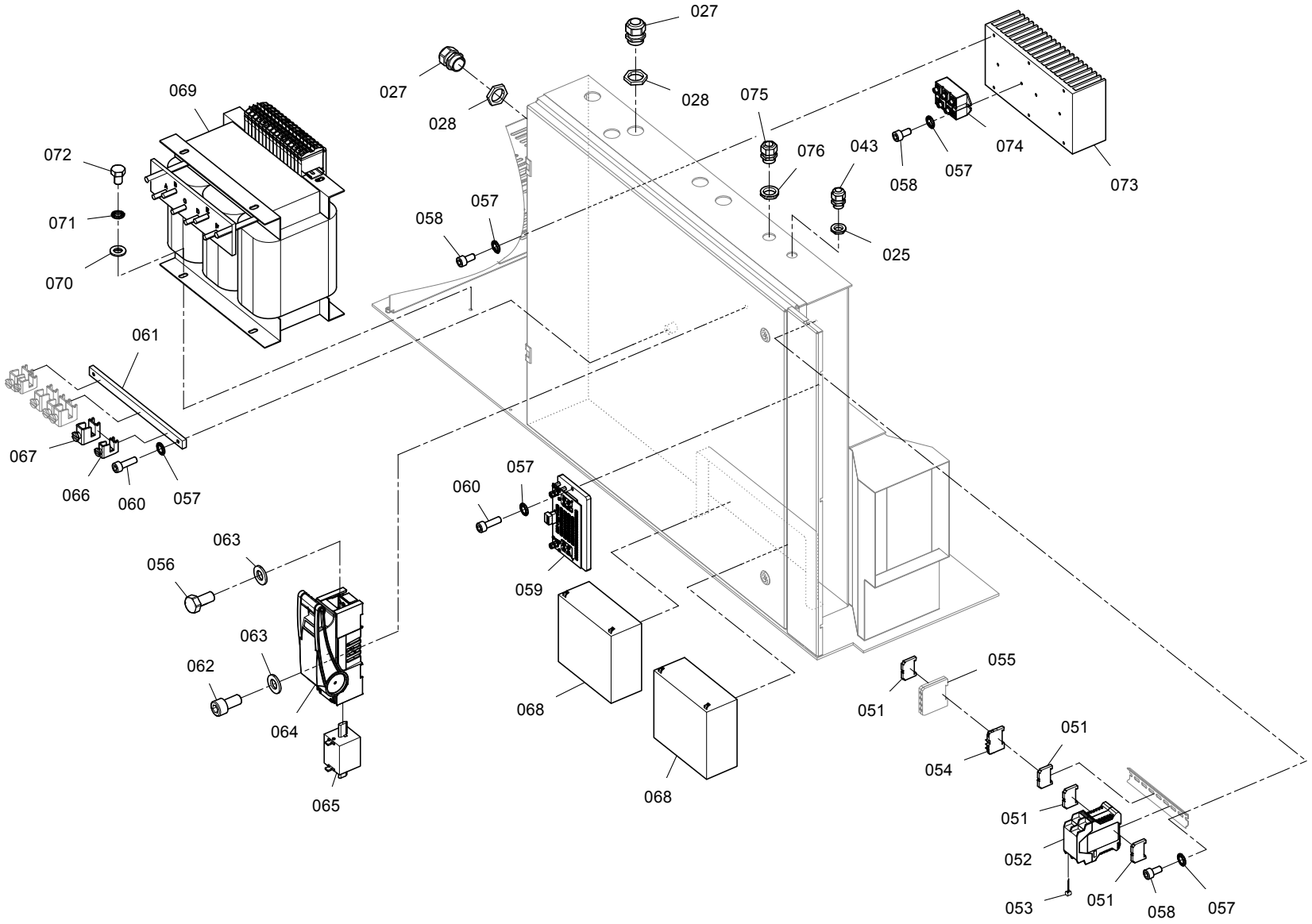

82040

RXX_8_20_40_302.cgm

Catalogue no. Katalog-Nr.	Part No. Material-Nr.	Part description en	Material-Bezeichnung de	Comment Bemerkung
82040.025	U41602015	Nut GMP/GL M20x1,5	Mutter GMP/GL M20x1,5	
82040.027	U41610032	Cable gland SKINTOP ST-M32x1,5	Kabelverschraubung SKINTOP ST-M32x1,5	
82040.028	U41603215	Nut piece GMP/GL M32x1,5	Mutterst?ck GMP/GL M32x1,5	
82040.043	U41610020	Cable gland SKINTOP ST-M20x1,5	Kabelverschraubung SKINTOP ST-M20x1,5	
82040.051	10140334	End adjuster 4mm2 GY	Endsteller 4mm2 GY	
82040.052	10750877	Module BIZON	Modul BIZON	
82040.053	10790134	Temperature sensor 2020 Ohm 1mA	Temperaturf?hler 2020 Ohm 1mA	
82040.054	10426070	Protective conductor terminal 4mm2 GNYE	Schutzleiterklemme 4mm2 GNYE 1 1/1	
82040.055	10971175	Terminal block fuse 5x20 2,5mm2 GY 1/1	Reihenklemme Sicherung 5x20 2,5mm2 GY 1/	
82040.056	10259091	Hex. screw M10x20	6kt-Schraube M10x20	
82040.057	10258859	Locking washer 6.4/10	Sicherungsscheibe 6.4/10	
82040.058	10258924	Cyl.screw M6x12	Zyl.Schraube M6x12	
82040.059	10964225	Module PWR 200A	Modul PWR 200A	
82040.060	10259461	Cyl.screw M6x20	Zyl.Schraube M6x20	
82040.061	10942366	Profile CU_20x10x320	Profil CU_20x10x320	
82040.062	10241973	Cyl.screw M10x20	Zyl.Schraube M10x20	
82040.063	10478062	Washer 10.5-St-200HV	Scheibe 10.5-St-200HV	
82040.064	11002679	Fuse holder XLP1-1P	Sicherungshalter XLP1-1P	
82040.065	10964032	Fuse NH1 200A 690V gR	Sicherung NH1 200A 690V gR	
82040.066	10584147	Connection terminal 4...35mm2 10mm	Anschlussklemme 4...35mm2 10mm	
82040.067	10964065	Connection terminal 16...120mm2 10mm	Anschlussklemme 16...120mm2 10mm	
82040.068	11016062	Accumulator DC12V 22Ah	Akkumulator DC12V 22Ah	
82040.069	10938904	Transformer 460-380/3x20V, 12 kVA	Transformator 460-380/3x20V, 12 kVA	
82040.070	10478061	Washer 8.4-St-200HV	Scheibe 8.4-St-200HV	
82040.071	10461551	Locking washer 8.4/13	Sicherungsscheibe 8.4/13	
82040.072	10259083	Hex. screw M8x12	6kt-Schraube M8x12	
82040.073	10734139	Air cooler complete	Luftk?hler komplett	
82040.074	10263117	Rectifier PSD 192/14	Gleichrichter PSD 192/14	
82040.075	U41610025	Cable gland SKINTOP ST-M25X1,5	Kabelverschraubung SKINTOP ST-M25X1,5	

R 36

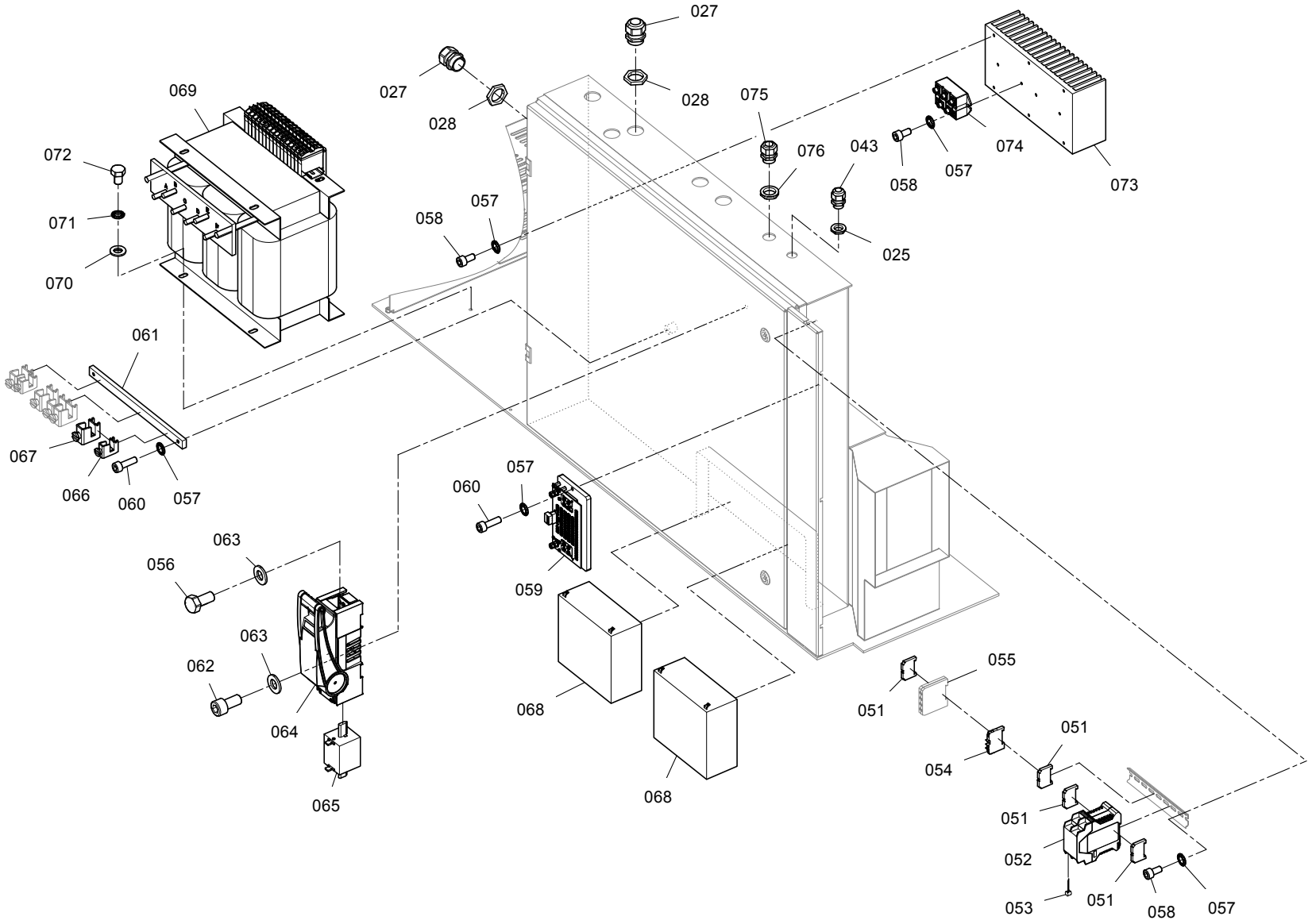

82040

RXX_8_20_40_302.cgm

Catalogue no. Katalog-Nr.	Part No. Material-Nr.	Part description en	Material-Bezeichnung de	Comment Bemerkung
82040.076	U41602515	Nut piece GMP/GL M25x1,5	Mutterst?ck GMP/GL M25x1,5	

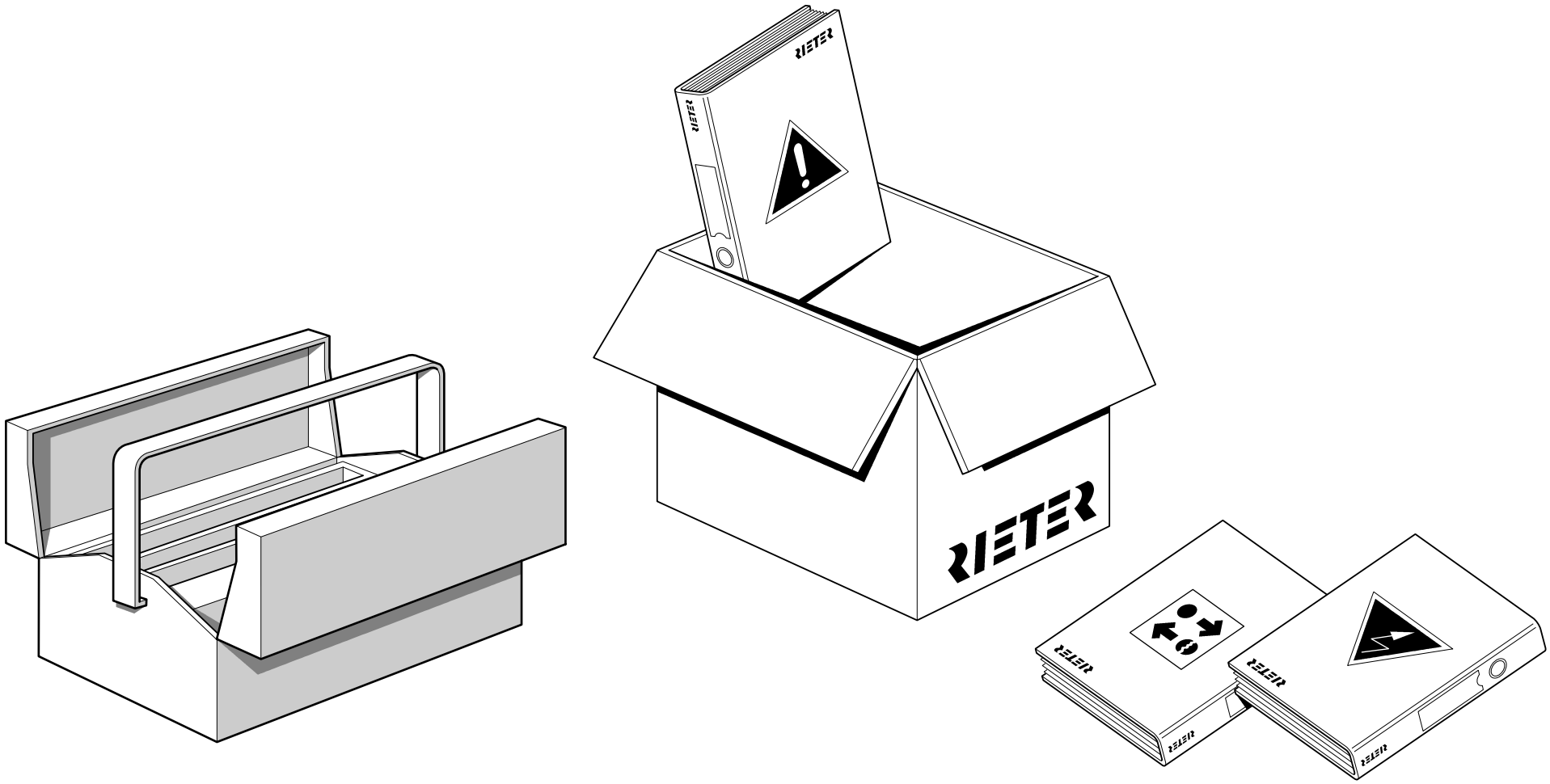

Navi_9_01.cgm

R 36

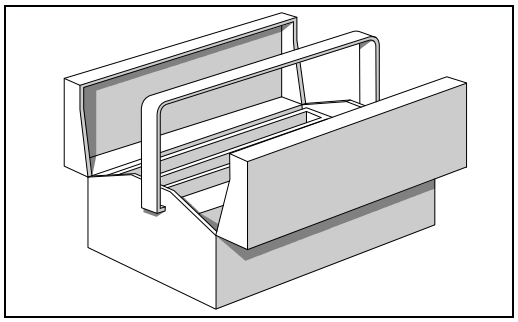

910

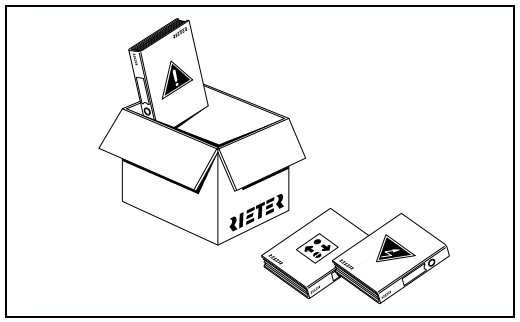

970

R 36

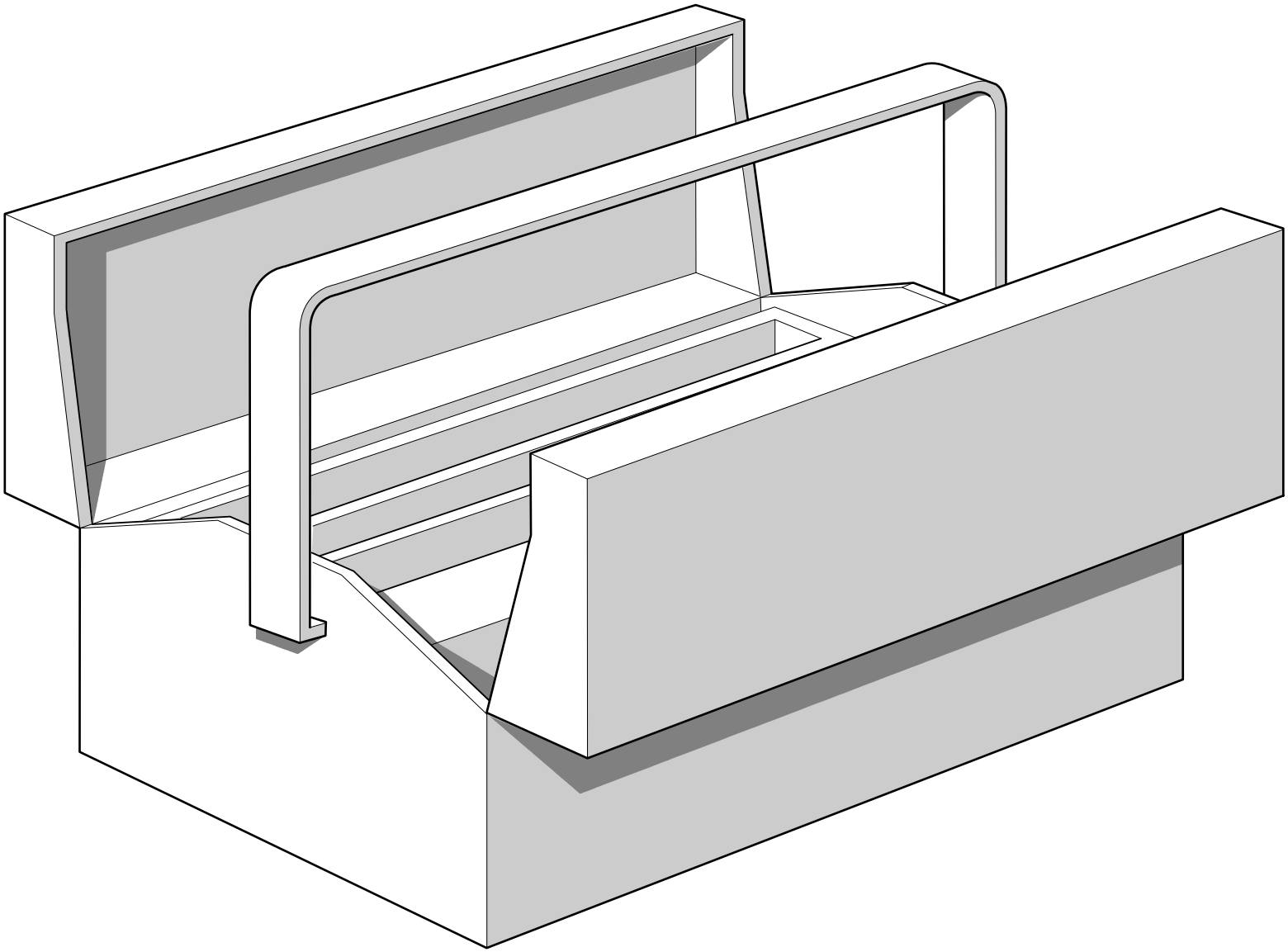

910

Navi_9_10_01.cgm

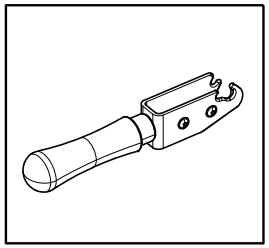
001

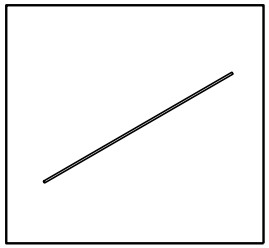
002

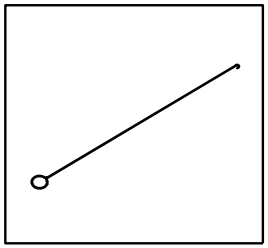
003

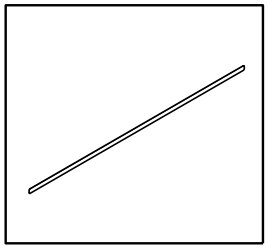
004

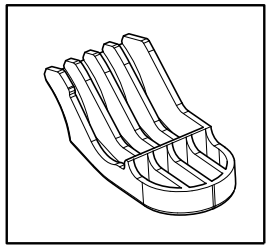
005

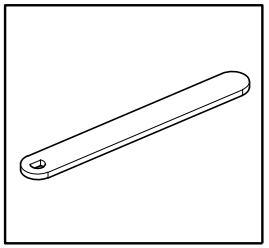
006

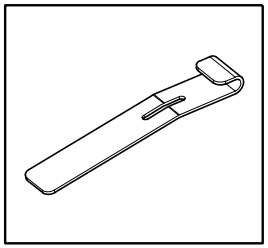
007

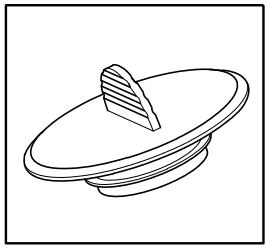
008

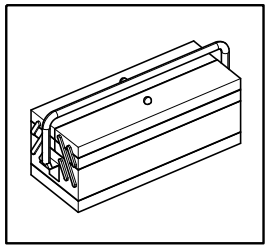
009

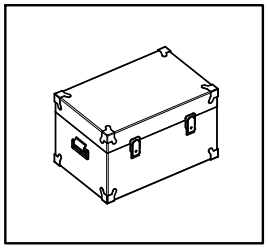
010

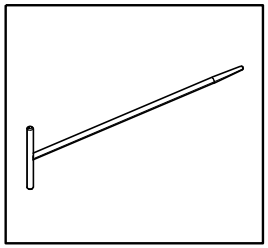
011

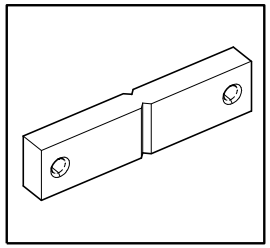
012

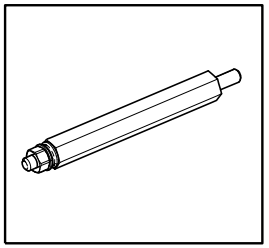
013

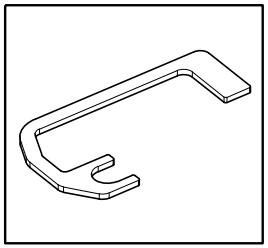
014

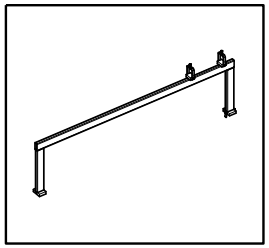
015

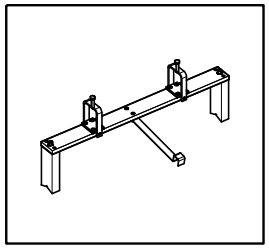
016

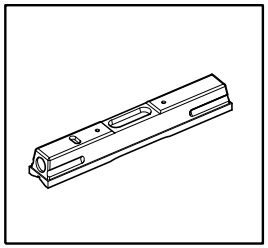
017

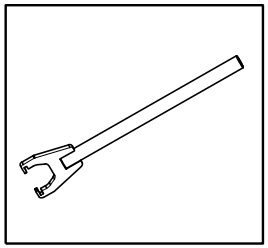
018

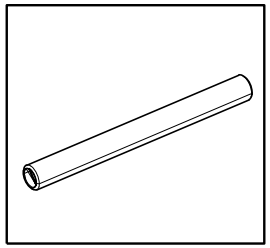
019

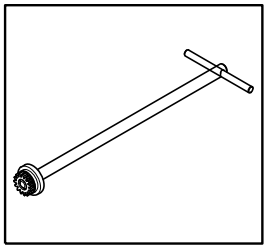
020

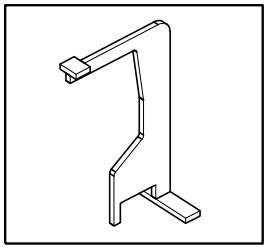
021

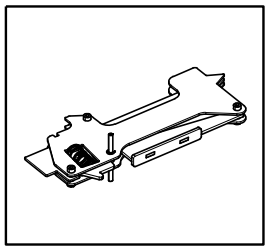
022

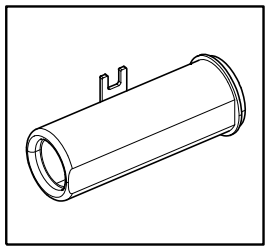
023

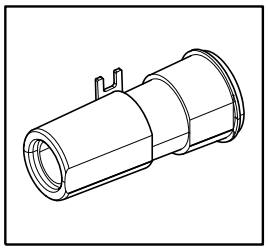
024

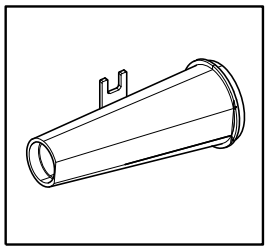
025

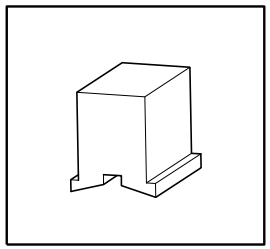
026

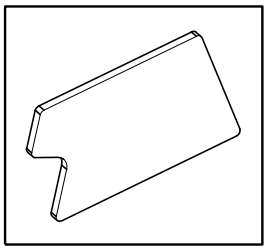
027

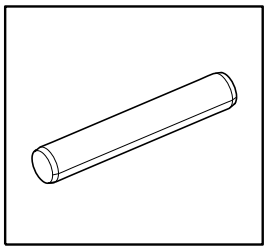
028

Catalogue no. Katalog-Nr.	Part No. Material-Nr.	Part description en	Material-Bezeichnung de	Comment Bemerkung
910.001	10982168	Doffing fork	Abnahme Gabel	
910.002	UA3592661	Wire cleaning system	Draht Reinigungsanlage	
910.003	10752449	Hook	Haken	
910.004	10391794	Clearer strip	Putzstreifen	
910.005	10776676	Clip	B?gelschelle	
910.006	10959128	Key compensator	Schl?ssel Kompensator	
910.007	10959135	Adjusting tool	Einstellwerkzeug	
910.008	10424361	Locking plug GPN 315 GS 22	Verschlussstopfen GPN 315 GS 22	
910.009	10838070	Tool kit R923+R35	Werkzeugset R923+R35	
910.010	10827208	Tool box R923/R35	Werkzeugkiste R923/R35	
910.011	10392024	Arbor	Dorn	
910.012	10766129	Fixing device	Halterung	
910.013	10746509	Adjusting device levelling	Einstellvorrichtung Nivellierung	
910.014	10746455	Checking device R35	Kontrollvorrichtung R35	
910.014	10982451	Checking device R35	Kontrollvorrichtung R35	
910.015	10925706	Straight guide edge	F?hrungslineal	
910.016	11008549	Water level holder R36	Wasserwaage Halter R36	
910.017	U61000006	Water level 300 0-0.2	Wasserwaage 300 0-0.2	
910.018	10471907	Adjusting device roll	Einstellvorrichtung Rolle	
910.019	UA3996164	Assembly equipment	Montageger?t	
910.020	11058042	Key pulley	Schl?ssel Riemenscheibe	
910.021	10937290	Adjusting device R36	Einstellvorrichtung R36	
910.022	10937321	Adjusting device belt R36	Einstellvorrichtung Riemen R36	
910.023	11002985	Adjusting device complete CYL	Einstellvorrichtung komplett CYL	
910.023	11002986	Adjusting device complete CYL D42	Einstellvorrichtung komplett CYL D42	
910.023	11002988	Adjusting device complete CYL D43	Einstellvorrichtung komplett CYL D43	
910.023	11002989	Adjusting device complete CYL D44	Einstellvorrichtung komplett CYL D44	
910.024	11002990	Adjusting device complete C2	Einstellvorrichtung komplett C2	

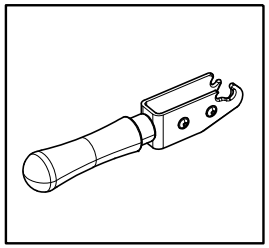
001

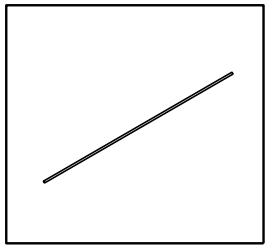
002

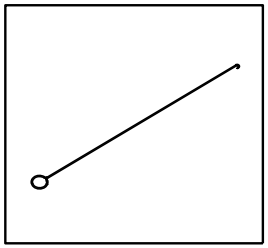
003

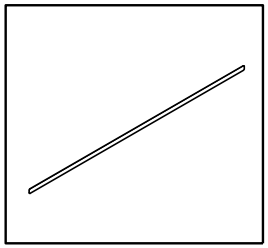
004

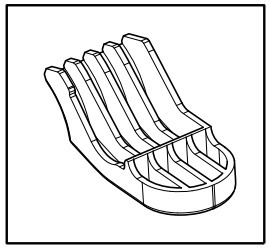
005

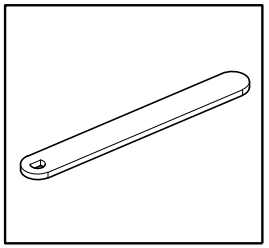
006

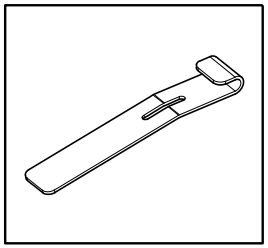
007

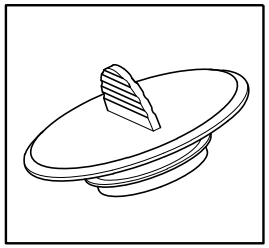
008

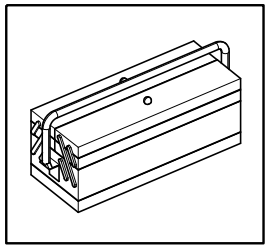
009

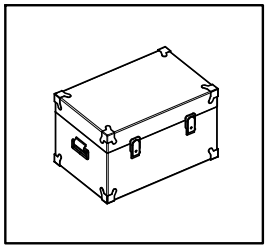
010

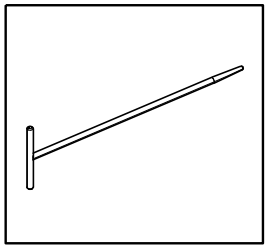
011

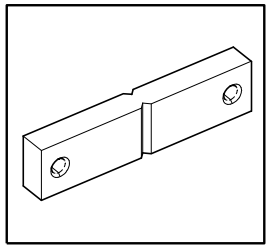
012

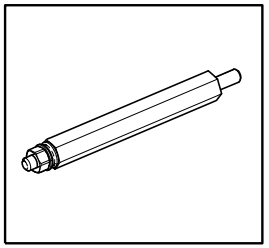
013

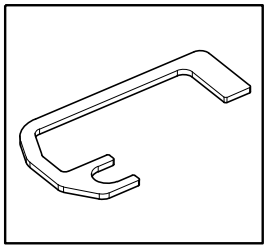
014

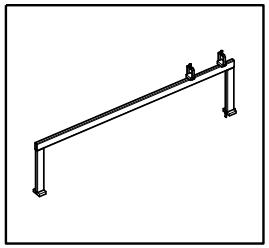
015

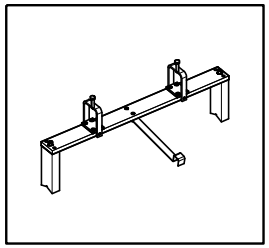
016

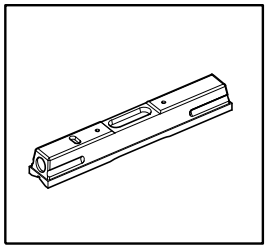
017

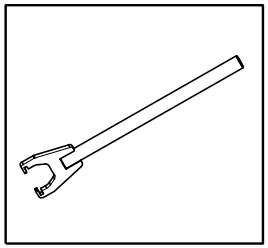
018

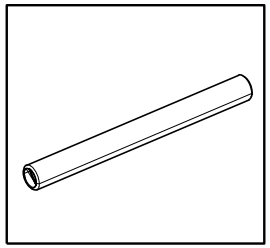
019

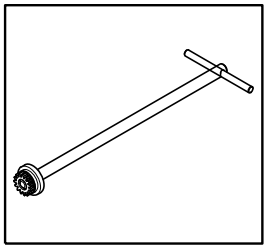
020

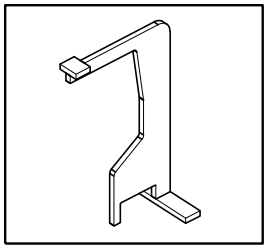
021

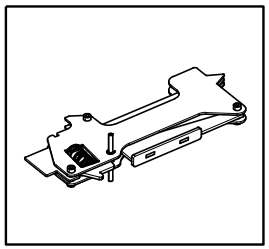
022

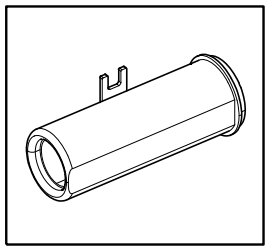
023

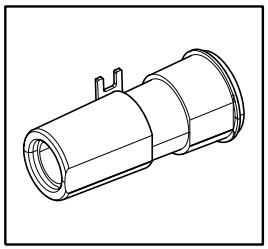
024

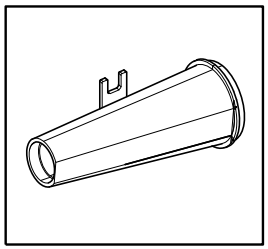
025

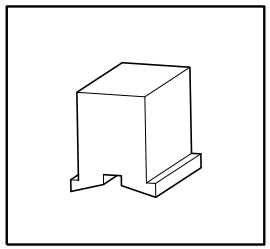
026

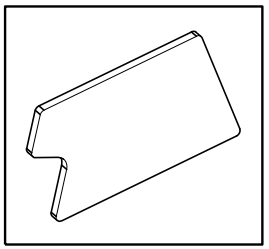
027

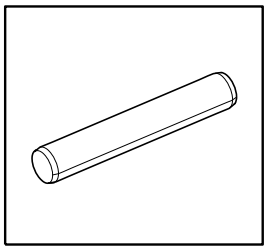
028

Catalogue no. Katalog-Nr.	Part No. Material-Nr.	Part description en	Material-Bezeichnung de	Comment Bemerkung
910.024	11003002	Adjusting device complete C2 D42	Einstellvorrichtung komplett C2 D42	
910.024	11003003	Adjusting device complete C2 D43	Einstellvorrichtung komplett C2 D43	
910.024	11003004	Adjusting device complete C2 D44	Einstellvorrichtung komplett C2 D44	
910.025	11003005	Adjusting device complete C4	Einstellvorrichtung komplett C4	
910.025	11003006	Adjusting device complete C4 D27	Einstellvorrichtung komplett C4 D27	
910.025	11003007	Adjusting device complete C4 D28	Einstellvorrichtung komplett C4 D28	
910.026	10806970	Yarn guide setting gauge	Fadenf?hrer Einstelllehre	
910.027	10826219	Spacer	Abstandhalter	
910.028	10573975	Cylindrical pin 5m6x30	Zylinderstift 5m6x30	

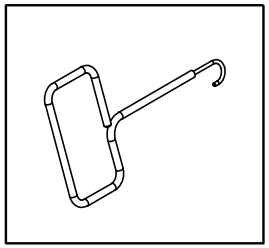
029

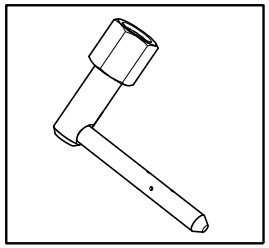
030

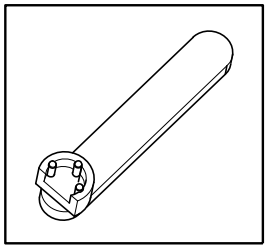
031

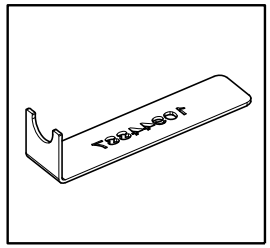
032

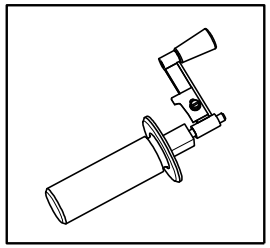
033

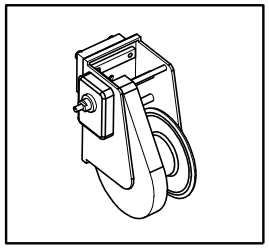
034

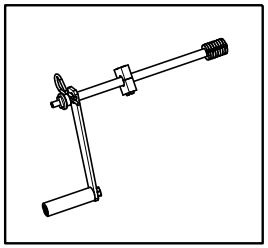
035

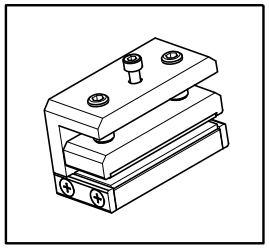
036

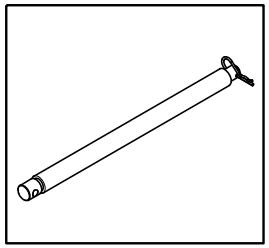
037

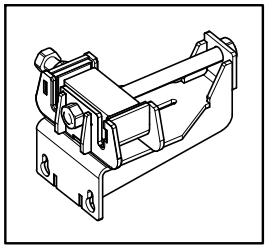
038

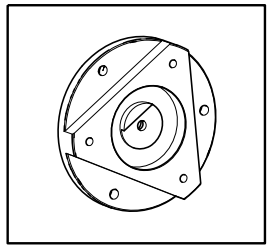
039

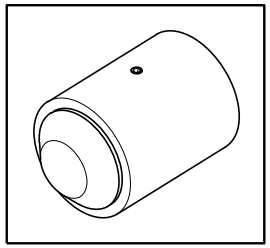
040

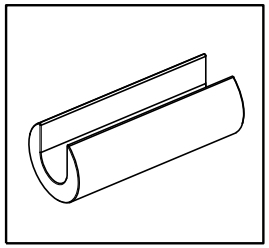
041

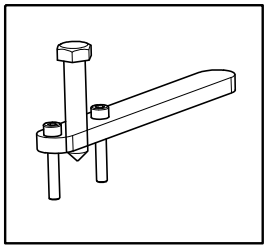
042

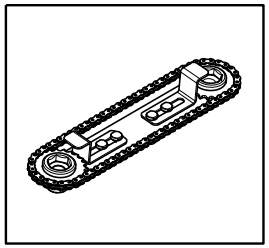
043

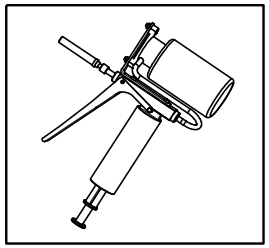
044

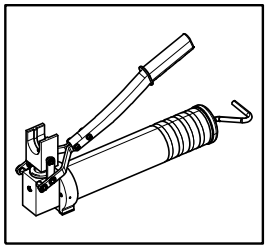
045

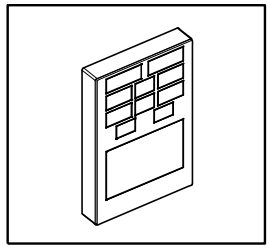
046

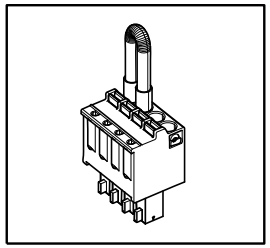
047

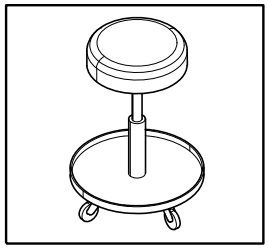
048

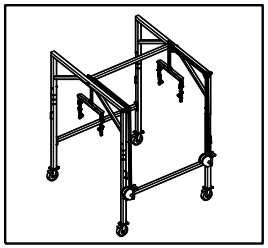
049

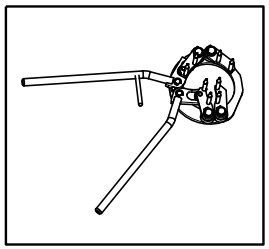
050

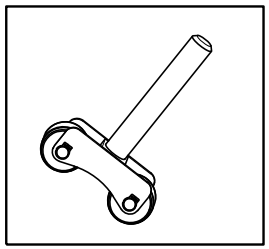
051

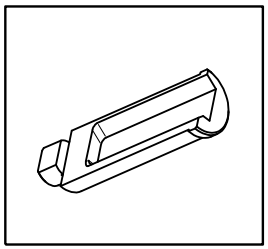
052

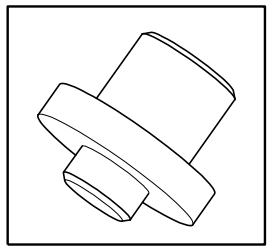
053

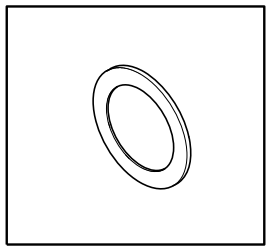
054

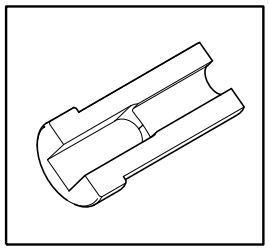
055

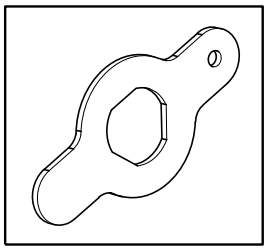
056

Catalogue no. Katalog-Nr.	Part No. Material-Nr.	Part description en	Material-Bezeichnung de	Comment Bemerkung
910.029	10811159	Mounting device tension spring	Montagevorrichtung Zugfeder	
910.030	UA4298321	Top unit lubrication	Aufsatz Schmierung	
910.031	UA4298331	Pinion extension	Ritzel Ausbau	
910.032	10944887	Dismantling device roller	Ausdr?ckvorrichtung Walze	
910.033	UA3996371	Paraffin smoother	Paraffingl?tter	
910.034	10770983	Winding unit complete	Einspuleinheit komplett	
910.035	10756972	Crank assembly	Kurbel Einbau	
910.036	10757813	Clamping device complete	Klemmvorrichtung komplett	
910.037	10772831	Roll	Rolle	
910.038	10746422	Belt tightener VV	Riemenspanner VV	
910.039	10757092	Flange	Flansch	
910.040	10757240	Removal tool sleeve clamp	Ausbauwerkzeug Klemmbuchse	
910.041	10757120	U-profile	U-Profil	
910.042	10757043	Removal tool gearwheel	Ausbauwerkzeug Zahnrad	
910.043	10649999	Tape tensioning device R35	Bandspannapparat R35	
910.044	10842159	Lubrication device rotor bearing	Schmierger?t Rotorlager	
910.045	10987292	Grease gun	Fettpresse	
910.046	10684780	Operator T1000A LCD 4lines	Operator T1000A LCD 4lines	
910.047	10988766	Plug in bar complete	Steckleiste komplett	
910.048	10530627	Stool 435-565	Hocker 435-565	
910.049	UE5831001	Mounting device ZM1 1	Montagevorrichtung ZM1 1	
910.050	10558985	Nipper	Zange	
910.051	10577733	Mounting device	Montagevorrichtung	
910.052	UE4929902	Rig 4	Vorrichtung 4	
910.053	UA3996314	Press-out device 4	Auspressvorrichtung 4	
910.054	10738670	Distance gauge S5	Distanzlehre S5	
910.054	10805837	Distance gauge S3	Distanzlehre S3	
910.054	10805838	Distance gauge S2	Distanzlehre S2	

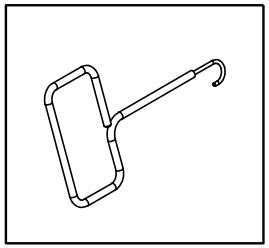
029

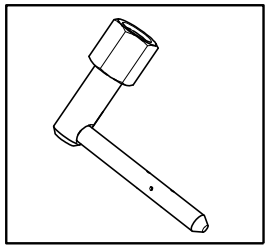
030

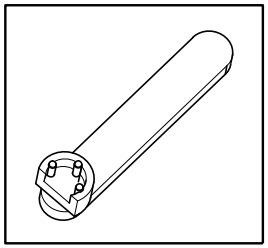
031

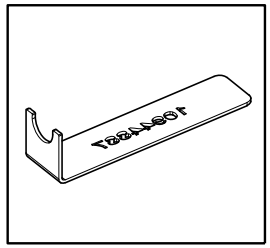
032

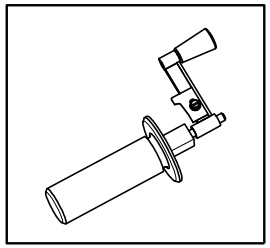
033

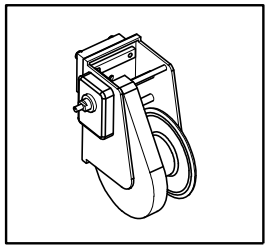
034

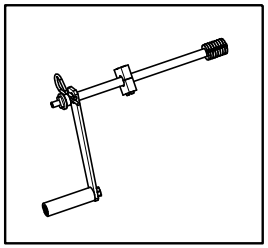
035

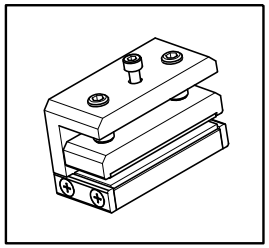
036

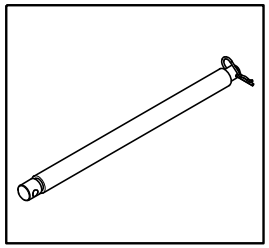
037

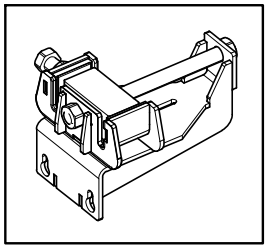
038

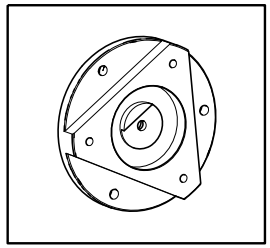
039

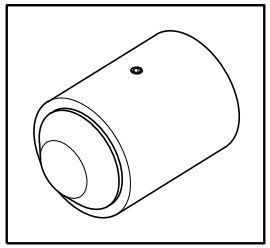
040

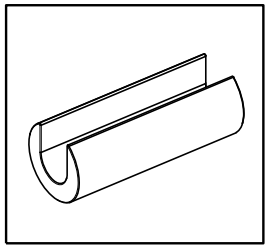
041

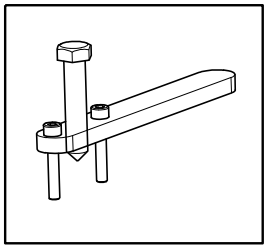
042

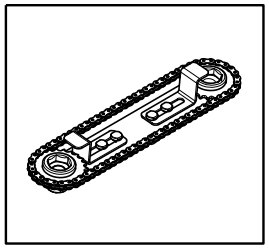
043

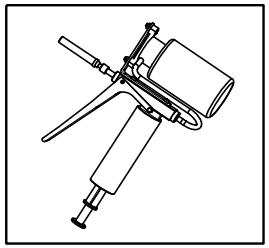
044

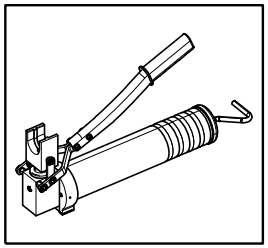
045

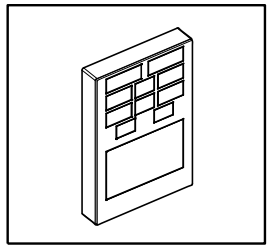
046

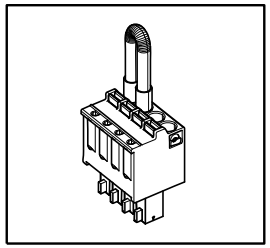
047

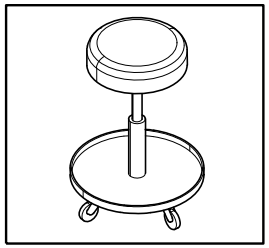
048

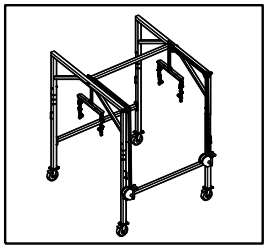
049

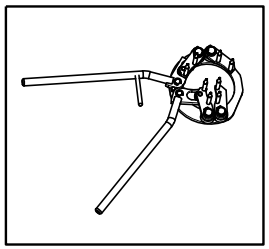
050

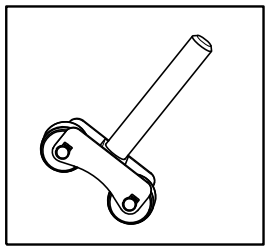
051

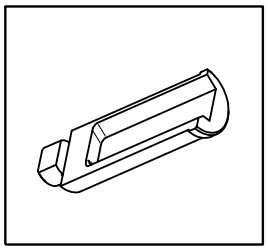
052

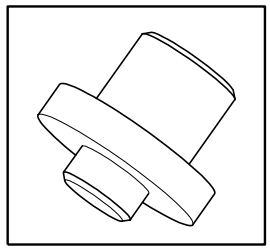
053

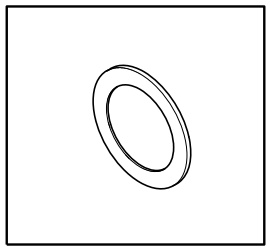
054

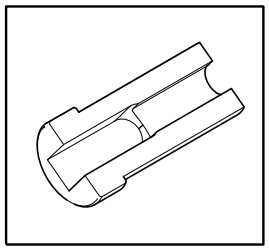
055

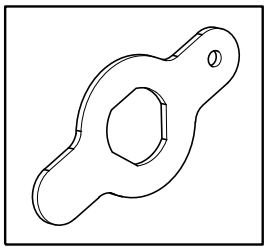
056

Catalogue no. Katalog-Nr.	Part No. Material-Nr.	Part description en	Material-Bezeichnung de	Comment Bemerkung
910.055	10472977	Push off cylinder	Ausstosszylinder	
910.055	10649637	Push off cylinder 10	Ausstosszylinder 10	
910.056	10583702	Key 17	Schl?ssel 17	
910.056	10592486	Key 24	Schl?ssel 24	

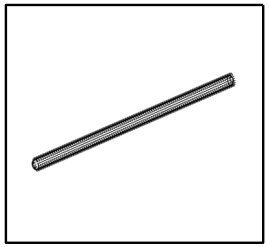
057

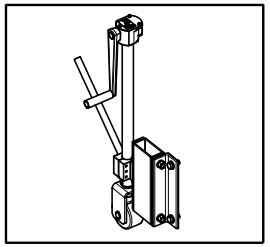
058

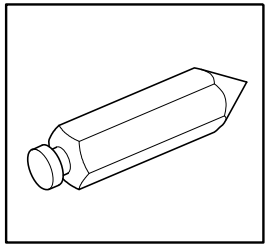
059

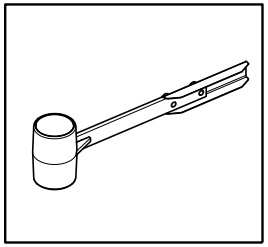
060

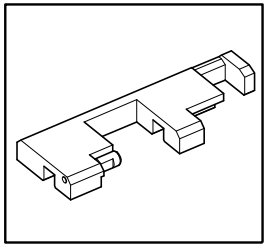
061

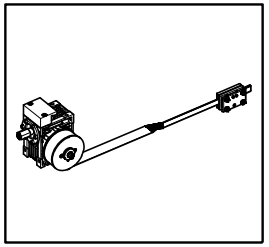
062

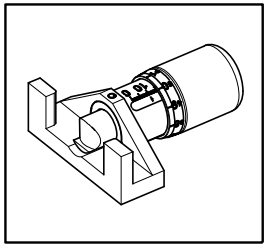
063

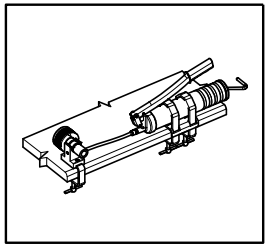
064

Catalogue no. Katalog-Nr.	Part No. Material-Nr.	Part description en	Material-Bezeichnung de	Comment Bemerkung
910.057	10473077	Cleaning brush IQplus	Putzb?rste IQplus	
910.057	11043112	Cleaning brush	Putzb?rste	
910.058	30077651	Transport wheel R923/R35	Transport Rad R923/R35	
910.059	11039604	Plumb line	Richtschnur	
910.060	11048513	Roller lever adjusting tool	Rollenhebel Einstellwerkzeug	
910.061	11062592	Adjusting tool guide Q10 asm	Einstellwerkzeug F?hrung Q10 asm	
910.061	11062593	Adjusting tool guide no Q10 asm	Einstellwerkzeug F?hrung no Q10 asm	
910.062	11024346	Fastening arrangement belt R36 Ass	Spannvorrichtung Riemen R36 Ass	
910.063	10986269	Measuring device gear belt	Messeinrichtung Riemengetriebe	
910.064	10995231	Lubrication device opening roller	Schmierger?t Aufl?sewalze	

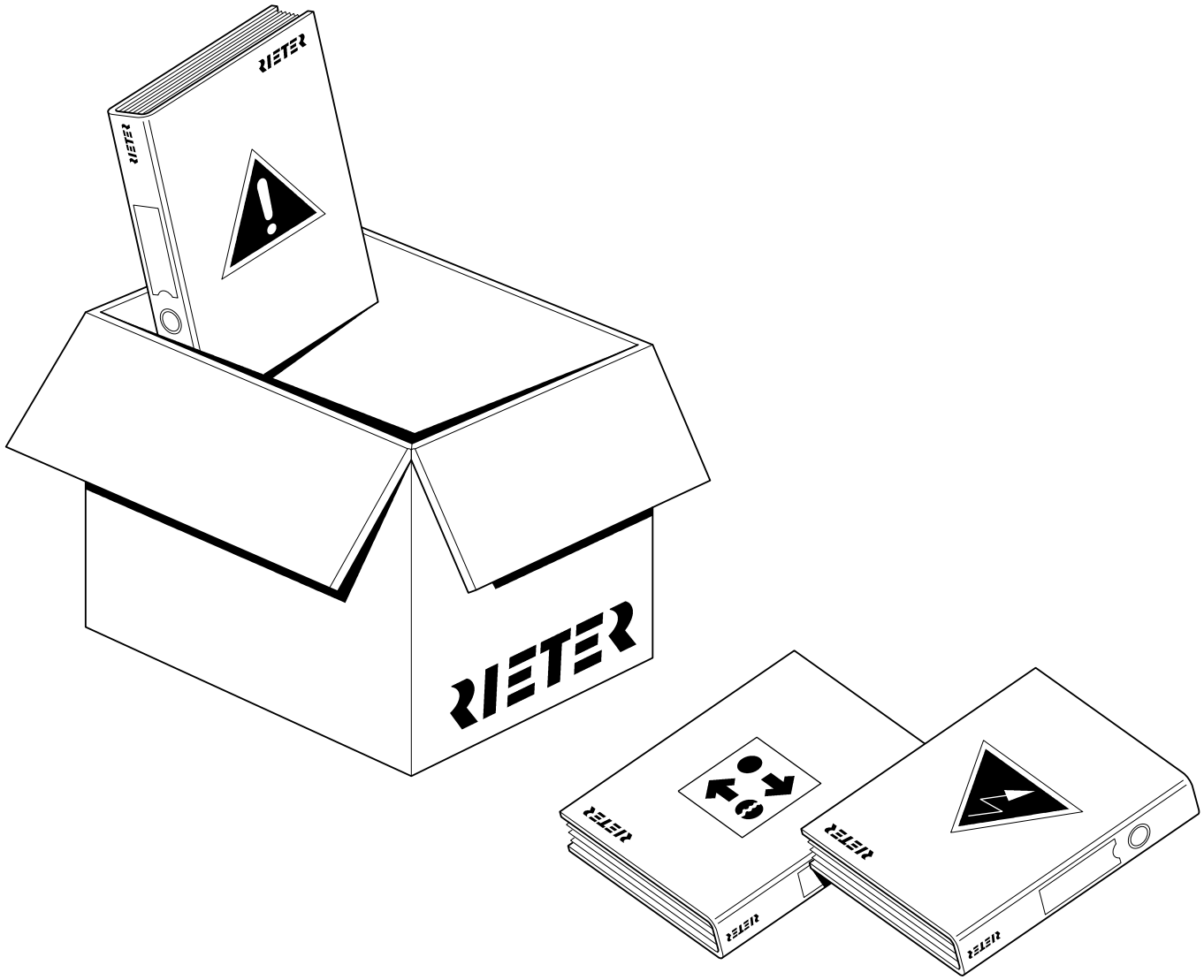

Navi_9_70_01.cgm

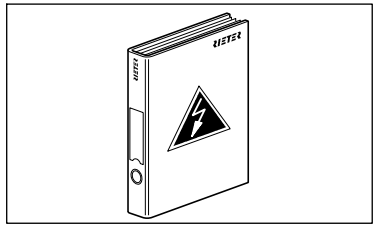

001

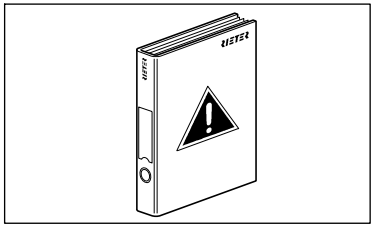

002

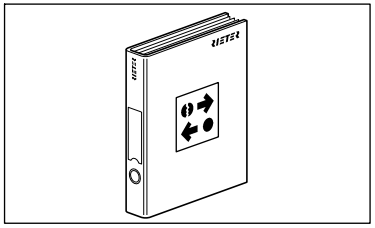

003

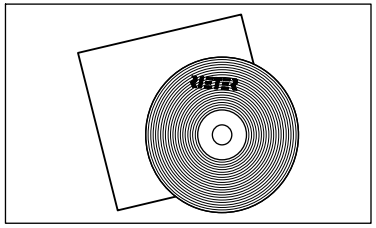

004

Catalogue no. Katalog-Nr.	Part No. Material-Nr.	Part description en	Material-Bezeichnung de	Comment Bemerkung
970.001	10942022	Schema R36 SDD - no FC OR en/cs	Schema R36 SDD - no FC OR en/cs	
970.002	10973391	Operating manual R 36 EN	Betriebsanleitung R 36 EN	
970.003	10984550	Spare part catalogue R 36	Ersatzteilkatalog R 36	
970.004	U47901000	CD CD-R 650MB	CD CD-R 650MB	